WiSAN-PMP 1 S

2.1-8.1

Installation and maintenance manual



en

ROMANIAN BULGARIAN SLOVENIAN HRVATSKI

16127160007448-E INST
11-2026

Valid from - 2025 (revision E/2026)

Keep this manual together with the wiring diagram in an accessible place for the operator for future reference.

Dear Customer,

We congratulate you on choosing this product.
Clivet has been working for years to offer systems able to assure the maximum comfort for a long time with highly-reliable, efficient, high-quality and safe solutions.
The target of the company is to offer advanced systems, that assure the best comfort and reduce energy consumption as well as the installation and maintenance costs for the entire life-cycle of the system.
With this manual, we want to give you information that is useful for all phases: from reception, installation and use to disposal - so that such an advanced system can provide the best performances during installation and use.

Best regards and have a good read.

CLIVET Spa

The data contained in this manual is not binding and may be changed by the manufacturer without prior notice. Reproduction, even partial, is FORBIDDEN.
© Copyright - CLIVET S.p.A. - Feltre (BL) - Italia.

Summary

1. Glossary 6

2. General 7

2.1 About the manual 7
2.2 General safety warnings 8

3. About R-290 refrigerant 10

3.1 Warnings for the installer and the Technical Support Service 11
3.2 General warnings 11
3.3 Safety checks and procedures 11
3.4 Safety area 14

4. Presentation of the product 17

4.1 Identification 17
4.2 Regulatory framework 17
4.3 Intended use 17
4.4 Description 17
4.5 Main components 18
4.6 Hydraulic module 19
4.7 Components supplied with the unit 20
4.8 Compatible accessories 20

5. Before installation 21

5.1 Prerequisites 21
5.2 Reception 21
5.3 Storage 21
5.4 Handling 22
5.5 Removal of the packaging 23

6. Installation 24

6.1 Prerequisites 24
6.2 General diagram 25
6.3 Clearances 26
6.4 Positioning 27
6.5 Removal of the transport bracket 29
6.6 Access to internal parts 30

7. Water connections 31

7.1 Prerequisites 31
7.2 Water flow-rate 31
7.3 Minimum water content 31
7.4 Water characteristics 31
7.5 Cleaning 31
7.6 Piping insulation 32
7.7 Hydraulic circuit antifreeze protection 32
7.8 Automatic frost protection valves 33
7.9 Position of connections 33

7.10 Hydraulic connection 33
7.11 Water filter....33
7.12 Water side pressure relief valve....33
7.13 Loading the plant 34

8. Electrical connections 35
8.1 Prerequisites 35
8.2 Cable inlet....36
8.3 Connecting the power supply....38
8.4 External component connections....41
8.5 Zone thermostat....47
8.6 Exhaust pipe heating tape....49
8.7 Simplified installation kit for unit 50
8.8 SMART GRID - Photovoltaic management....51

9. Starting up the system.... 52
9.2 SYSTEM CONFIGURATION 54

10. Start-up 55
10.1 Opening the “For serviceman” menu....55
10.2 Function test of actuators....55
10.3 Air vent....56
10.4 Test of operating modes....56
10.5 Checking the minimum flow-rate....56
10.6 Start-up report 57
10.7 2014/68/UE PED directive....57

11. Maintenance 58
11.1 Prerequisites 58
11.2 Maintenance check list....59
11.3 Unit booklet....60
11.4 Standby mode....60
11.5 Emptying the system....60
11.6 Cleanliness of the structure 60
11.7 Air side exchanger....60
11.8 Water pressure....60
11.9 Water filter....61
11.10 Degasser / Deaerator....61
11.11 Water side pressure relief valve....61
11.12 Unit electrical panel....61
11.13 Using glycol 61
11.14 refrigerant side pressure relief valve 61

12. Decommissioning 62
12.1 Disconnection 62
12.2 WEEE INFORMATION....62
12.3 WEEE Disposal Procedure (Italian Market)....62
12.4 WEEE Disposal Procedure (German Market)....62
12.5 WEEE Disposal Procedure (Croatian Market) 62

13. Residual risks 63
13.1 General....63
13.2 Danger zone....63

13.3 Handling 63
13.4 Installation 63
13.5 Refrigerant 65
13.6 Hydraulic parts 65
14. Advanced applications 66
14.1 Units connected in cascade 66
15. Technical data 68
16. ErP data 75

1. **Glossary**

Sign	Description
DHW	Domestic hot water
AHS	Backup boiler
HMI	User interface
IBH	Backup electric heater
OFN	Oxygen-Free-Nitrogen
P_i	Unit pump
P_o	Secondary circuit pump (or Zone 1 pump for double zone systems)
P_c	Zone 2 pump (for double zone systems)
P_d	DHW recirculation pump
P_s	Solar thermal circuit pump
P_x	Defrosting status or alarm status
Pe	Evaporating pressure
Pc	Condensing pressure
SV1	3-way circuit/DHW diverter valve
SV2	3-way diverter valve for direct double zone systems
SV3	3-way mixing valve for mixed circuit
TBH	Backup electric heater for DHW tank
T1	Water supply temperature from additional heating source (with IBH heater or AHS boiler)
T2	Refrigerant temperature entering the user side exchanger (plate heat exchanger) in Cooling mode (or leaving in Heating mode)
TL	Refrigerant temperature leaving the source exchanger (coil) in Cooling mode (or entering in Heating mode)
T3	Refrigerant temperature of a circuit downstream of the distributor in heating mode (used to determine when to start and stop defrosting)
T4	Outdoor air temperature
T5	DHW tank temperature
T1S	Water supply temperature setpoint
Ta	Room air temperature, detected by the probe in the HMI
Tbt1	Temperature of the upper part of the inertial storage tank
Th	Compressor suction refrigerant temperature
Tp	Compressor discharge refrigerant temperature
Tsolar	Water temperature in the solar thermal circuit
Tw2	Water supply temperature for the mixed zone (for double zone systems)
TWin	Unit water return temperature
TWout	Unit water supply temperature

2. General

2.1 About the manual

- The manual ensures proper installation, use and maintenance of the unit
- this manual is an integral and essential part of the product
- keep this manual together with the wiring diagram in an accessible place for the operator. It should always accompany the product, even if it is transferred to another owner or user
- recipients of the instructions in the manual are indicated in the “Recipients” chapter
- the recipient is indicated at the beginning of each section of the manual
- recipients, to the extent of their responsibility, are required to read the instructions and warnings in this manual as they provide important information on safe installation, use and maintenance.

Remember that:

- the manufacturer accepts no liability for damage to persons or property resulting from failure to observe the rules in this manual
- failure to observe the instructions in this manual will result in forfeiture of the warranty
- the manufacturer reserves the right to make changes or improvements to this documentary material and to the units without prior notice
- visit the manufacturer’s website for up-to-date details
- this manual contains proprietary information, all rights reserved, it may not be reproduced or photocopied, either in whole or in part, without the prior written consent of manufacturer.

2.1.1 Symbols

The symbols in the following chapter can be found in the manual and on the product, and provide quick and clear information for correct and safe use.

2.1.1.1 Safety symbols

Danger

This symbol indicates warnings, failure to comply may result in serious harm to health and fatal injuries.

Warning

This symbol indicates warnings, failure to comply may result in irreparable damage to the product or harm to the environment.

Prohibition

This symbol indicates operations that must never be carried out.

Note

This symbol indicates important information.

2.1.1.2 Editorial symbols

In the texts

Purpose of the action: indicates the purpose of a sequence of actions.
(it is identified by bold text followed by :)

► this symbol indicates actions that are required

○ this symbol indicates the expected result after an action

• this symbol indicates the lists

In the images

1 uniquely indicates a component

(A) indicates a group of components

1 indicates a sequence of actions

In the images, dimensions are expressed in millimetres unless otherwise indicated.

2.1.1.3 Symbols on the unit

The following symbols are used in some parts of the product:

Caution flammable material:

The refrigerant gas is flammable and odourless.
Do not place it near continuously operating ignition sources (naked flames, gas appliances, electric stoves, lit cigarettes, etc.).

Instructions for the User

Read the User Manual carefully before using the product.

Instructions for the User

Read the Installer Manual carefully before installing the product.

Instructions for the Technical Support Service

Read the Technical Support Service Manual carefully before carrying out any operation on the product.

2.1.2 Recipients

2.1.2.1 User

Inexperienced person who is capable of:

- operating the product safely for people, for the product and for the environment
- interpreting elementary diagnostics of faults and abnormal operating conditions
- carrying out simple adjustment, test and maintenance operations.

2.1.2.2 Installer

Experienced and qualified person able to:

- to put the product in a safe operating condition for people, for the product and for the environment
- to comply with the regulations in force in the country of destination
- to provide the user with basic information on safe use and maintenance in accordance with this manual and current national regulations
- comply with the regulations in force in the country of destination.

2.1.2.3 Technical support service

Experienced person, qualified and authorised directly by the manufacturer to:

- carry out a diagnosis of product faults and abnormal operation, possibly using information provided by the user
- rectify faults, carrying out the necessary repairs, replacements and adjustments that will restore the product's ability to function correctly and safely for the people, for the product and for the environment
- comply with the regulations in force in the country of destination.

2.1.3 Document organisation

- The manual is divided into sections, each dedicated to one or more recipients
- the recipient is indicated at the beginning of each section of the manual.

2.2 General safety warnings

⚠ Read the "About the manual" chapter carefully before proceeding with any operation.

⚠ Each chapter contains specific warnings for the operations given therein. These warnings should be read before starting any activities.

⚠ For every operation, always comply with current national regulations.

⚠ All personnel must be aware of the operations and of the hazardous situations that may arise when starting any operations on the unit.

⚠ Any contractual and non-contractual liability for damage caused to persons, animals or property by installation, adjustment or maintenance errors or improper use is excluded.

⚠ Any uses not expressly indicated in this manual are not permitted.

⚠ Do not change or tamper with the device as this can lead to hazardous situations.

⚠ Use appropriate safety clothing and equipment.

⚠ The manufacturer accepts no liability for failure to comply with current safety and accident prevention regulations.

⚠ The manufacturer reserves the right to make changes to its models at any time to improve its product, subject to the essential characteristics described in this manual.

⚠ The manufacturer is not obliged to add these changes to units previously manufactured, already delivered or being built.

⚠ The unit is suitable for use by children aged 8 years and over and by persons with reduced physical, sensory or mental capabilities or lack of experience or knowledge if they are properly supervised or have received instructions on the safe use of the device and have understood the associated hazardous situations. Children must not play with the device. Cleaning and maintenance operations must not be carried out by children without supervision.

⛔ It is forbidden to touch the device with wet or damp parts of the body.

- It is forbidden to carry out any operation before disconnecting the device from the mains power supply by turning the system's main switch to "off".
- It is forbidden to change the safety or control devices without the device manufacturer's authorisation and instructions.
- It is forbidden to pull, unplug or twist the electrical cables coming out of the device, even if it is disconnected from the mains power supply.
- It is forbidden to introduce objects and substances through the air intake and supply grills.
- It is forbidden to open the access doors to internal parts of the unit without first turning the system's main switch to "off".

3. About R-290 refrigerant

This section contains specific safety information and warnings on the use of R-290 refrigerant.

⚠ For more comprehensive information, read the safety data sheet for the refrigerant used.

⚠ The refrigerant used inside this unit is highly flammable. A refrigerant leak that is exposed to an external ignition source can create fire risks.

Refrigerant quantity charged at the factory

Size	Refrigerant quantity charged at the factory
	Refrigerant / kg
2.1	1,05
3.1	1,05
4.1	1,1
5.1	1,1
6.1	1,5
7.1	1,5
8.1	1,5

Physical characteristics of R-290 refrigerant		
Safety class (ISO 817)	A3	
GWP (Global Warming Potential)	0,02	t CO_2 eq, 100yr
LFL Low flammability limit	1,7 - 10,8	vol % in air
BV Burning velocity	6,7	cm/s
Normal boiling point	-42,1	°C
Self-ignition temperature	470	°C

3.1 Warnings for the installer and the Technical Support Service

ⓘ The use of flammable refrigerants entails specific safety warnings for certain operations during installation and maintenance.

3.2 General warnings

⚠ The refrigerant used inside this unit is highly flammable. A refrigerant leak that is exposed to an external ignition source can create fire risks.

⚠ Before starting work on systems containing flammable refrigerants, safety checks must be carried out to ensure that the risk of combustion is minimised.

⚠ Installation and maintenance personnel and other people working in the area should be informed about the nature of the work to be done.

⚠ Do not pierce or burn.

⚠ The unit must be protected from accidental impacts so as to prevent mechanical damage that would cause a refrigerant leak.

⚠ Ensure that there are no continuously operating ignition sources (naked flames, gas appliances, electric stoves, lit cigarettes, etc.).

⚠ Do not place flammable objects (spray cans) within 1 metre of the exhaust air.

3.3 Safety checks and procedures

Before starting an intervention, carry out appropriate safety checks to ensure that the risk of ignition is minimal.
Follow these precautions before starting an intervention:

3.3.1 Checks in the area

Perform the following checks:

- carry out safety checks to ensure that the risk of combustion is minimised
- avoid working in tight spaces
- mark the area around the work space
- ensure safe working conditions around the area and check that there is no flammable material.

3.3.2 Work procedures

- Interventions must be carried out according to a controlled procedure in order to minimise the risk of flammable gases or vapours being present during the work.

3.3.3 Checking the presence of refrigerant

Perform the following checks:

- the area must be checked using an appropriate refrigerant detector before and during the intervention so that the technician is aware of potentially flammable atmospheres
- check that the leak detector is suitable for use with flammable refrigerants (it does not generate sparks and is adequately sealed or intrinsically safe)
- check that it is placed in a suitable space to promptly check for leaks linked to the maintenance activity carried out

⛔ It is forbidden to use leak detectors with halogen lamps.

⚠ Remember that R-290 refrigerant is heavier than air.

3.3.4 Presence of fire extinguishers

When performing hot operations on refrigeration equipment or associated components:

- keep a suitable extinguisher at hand
- keep a dry-powder or CO_2 extinguisher near the work area.

3.3.5 Absence of ignition sources

When operations to be carried out on a refrigeration system involve exposing piping containing or having contained a flammable refrigerant.

Perform the following checks:

- all possible ignition sources, including cigarette smoke, should be kept at a sufficient distance from the installation, fixing, disassembly and disposal site, as flammable refrigerant may escape into the surrounding space during these operations.
- before starting the intervention, the area around the unit must be inspected to check that it does not present ignition or flammability hazards.

⛔ It is forbidden to use any ignition source that could generate a risk of fire or explosion.

⛔ It is forbidden to smoke near the unit. “NO SMOKING” signs must be affixed.

⛔ It is forbidden to use a mobile phone near

the unit.

3.3.6 Area ventilation

Before working on the system or performing hot operations.

Perform the following checks:

- the area must either be open
- ventilation must be constant throughout the entire operation and be capable of safely dispersing all refrigerant released and preferably expelling it outside into the atmosphere.

3.3.7 Checks on the refrigeration system

Perform the following checks:

- if an electrical component is replaced, the new one must be suitable for the intended use and in accordance with the correct specifications
- follow the manufacturer's maintenance and service instructions in all circumstances
- when in doubt, consult the manufacturer's technical department
- the charge volume must be suitable for the room volume and the intended use in which the components containing the refrigerant are installed, see the electrical installation requirements in EN 378
- ventilation devices and openings must open properly and not be obstructed
- if an indirect refrigerant circuit is used, the presence of refrigerant in the secondary circuits must be checked
- equipment markings must remain visible and legible
- markings and indications that become illegible must be corrected
- pipes or other components of the refrigerant circuit must be installed in locations where exposure to potentially corrosive substances is unlikely for components containing the refrigerant, unless they are made of materials inherently resistant to corrosion or adequately protected against the risk of corrosion.

3.3.8 Checks on electrical devices

Remember that:

- the fixing and maintenance procedures for electrical components must include initial safety checks and component inspection procedures
- if a defect is found that may generate safety risks, the power supply to the circuit must be interrupted until the problem is satisfactorily resolved
- if the problem cannot be solved immediately, but it is necessary to keep the system in operation, an appropriate temporary solution must be adopted
- the situation should be communicated to the owner of the unit so that all persons concerned can be duly informed

Carry out the following checks:

- check that the capacitors are discharged: this procedure must be performed safely to avoid the possibility of sparks
- check that there are no live components or wires exposed while charging, resetting or venting the system
- check for ground fault interruptions
- check that the unit is not powered and if necessary disconnect the power supply before proceeding with the next steps

3.3.9 Fixing sealed components

Remember that:

- all electrical users must be disconnected from the equipment before removing the seal covers, etc.
- if it is absolutely necessary to have a power supply during the intervention, a permanent leak detection method must be set up at the most critical point to signal any potentially dangerous situations
- the use of silicone sealants may make some types of leak detection equipment less effective.

Ensure that:

- the casing must not be altered to such an extent that the required level of protection is compromised, including damage to cables, excessive number of connections, use of terminals that do not conform to the original specifications, damage to seals, incorrect assembly of glands, etc.
- the device must be installed safely.
- seals or sealing materials have not deteriorated to such an extent that they no longer ensure a perfect seal keeping flammable atmospheres from entering
- spare parts must comply with the manufacturer's specifications.

3.3.10 Fixing intrinsically safe components

Remember that:

- before applying capacitance or permanent inductance loads to the circuit, check that this operation does not result in the permissible voltage and current values for the equipment in use being exceeded
- intrinsically safe components are the only types of components that can be operated under voltage in the presence of a flammable atmosphere
- the test device must have the correct nominal characteristics
- only use parts specified by the manufacturer to replace components
- other components can cause ignition of the refrigerant released into the atmosphere.

3.3.11 Wiring

Check that:

- the wiring must not be exposed to wear, corrosion, excessive pressure, vibration, sharp edges or other

adverse environmental influences.

ⓘ The check should also take into account the effects of ageing or continuous vibration from compressors, fans or other similar sources.

3.3.12 Detection of flammable refrigerants

⛔ The use of potential ignition sources for the search or detection of refrigerant leaks is prohibited under any circumstances.

⛔ The use of halogen torches or other naked flame detection systems is not permitted.

3.3.13 Leak detection methods

Remember that:

- electronic leak detectors can be used to detect flammable refrigerants, but their sensitivity may not be adequate or require recalibration
- detection equipment must be calibrated in a refrigerant-free area
- the detector is not a potential ignition source and is suitable for the refrigerant
- leak detection equipment must be configured at a percentage of the lower flammability limit (LFL) of the refrigerant and be calibrated for the refrigerant used with confirmation of the appropriate gas percentage (max. 25%)
- leak detection fluids are suitable for use with most refrigerants but the use of detergents containing chlorine should be avoided, as chlorine can react with the refrigerant and corrode copper piping.

If there is a refrigerant leak:

- remove or extinguish all naked flames
- if brazing is required, all of the refrigerant must be removed from the system, or isolated (by means of shut-off valves) in a part of the system away from the leak
- purge the system with oxygen-free nitrogen (OFN) both before and during brazing.

3.3.14 Removal and evacuation

Follow the procedure below:

► remove the refrigerant
► purge the circuit with inert gas
► evacuate
► purge again with inert gas
► open the circuit by cutting or brazing

Remember that:

- the refrigerant charge can be recovered in the appropriate cylinders
- the system must be purged with oxygen-free nitrogen to make the unit safe
- it may be necessary to repeat this procedure several times
- compressed air or oxygen must not be used for this operation
- purging can be performed by introducing oxygen-free nitrogen into the vacuum circuit in the system and continuing to fill until the operating pressure is reached, then venting into the atmosphere and recreating the vacuum
- this procedure must be repeated until the refrigerant is completely exhausted from the system.

When the last charge of OFN is added:

- the system must be vented to barometric pressure to allow the work to be performed

ⓘ This operation is absolutely essential if brazing operations are to be carried out on the piping.

- check that the vacuum pump outlet is not closed for any ignition source and that good ventilation is available.

3.3.15 Charging operations

Remember that:

- when using charging equipment, avoid contamination with different refrigerants
- cylinders must be kept upright
- before the refrigerant is charged into the system, ensure that it is properly earthed
- the system must be labelled after charging (if the label is not already present)
- extreme care must be taken to avoid overfilling or underfilling the system
- before recharging the system, the pressure must be tested using oxygen-free nitrogen
- after charging, but before start-up, the system should not leak
- an additional check for leaks must be carried out before leaving the site.

3.3.16 Decommissioning

Remember that:

- before performing this procedure, it is essential that the technician is fully familiar with the equipment and all of its components
- all refrigerants must be recovered following safe procedures
- an oil and refrigerant sample must be taken before proceeding
- before reusing the recovered refrigerant, it should be analysed
- before starting the procedure, it is essential to check that the power supply is available

- electrically isolate the system.

Before proceeding, check that:

- mechanical equipment for handling refrigerant cylinders is available, if necessary
- the necessary personal protective equipment is available and is used
- the recovery process is carried out under the constant supervision of a competent person
- the recovery equipment and cylinders comply with the regulations in force.

To recover:

- if possible, transfer the refrigerant to the unit using a “pump-down” procedure
- if it is not possible to create a vacuum, use a manifold that allows the refrigerant to be exhausted from various parts of the system
- place the cylinder on the scale
- start the recovery device and use it according to the manufacturer's instructions
- do not fill the cylinders excessively. (Do not exceed 80% of the liquid volume)
- do not exceed the maximum working pressure of the cylinder, even temporarily
- after filling the cylinders correctly and completing the procedure, transfer the cylinders and equipment from the site as soon as possible and close all shut-off valves on the equipment.
- before charging the recovered refrigerant into another refrigeration system, it must be cleaned and checked.

3.3.17 Labelling

Remember that:

- the device must be labelled to indicate that it has been decommissioned and emptied of refrigerant
- the label must be dated and signed
- check that labels indicating the content of flammable refrigerant are affixed to the device.

3.3.18 Recovery

When discharging refrigerant from a system for maintenance or decommissioning reasons.

Check that:

- the refrigerant is removed safely
- only cylinders suitable for refrigerant recovery are used
- the number of cylinders required to hold the entire system charge is available
- all cylinders to be used are designed for the refrigerant recovered and labelled for that refrigerant (special refrigerant recovery cylinders)
- the cylinders are equipped with a pressure relief valve and well-functioning shut-off valves
- empty recovery cylinders are evacuated and, if possible, cooled before recovery
- the recovery equipment is in good working order, accompanied by a set of instructions at hand, and suitable for the recovery of flammable refrigerants
- a set of well-functioning calibrated scales is provided
- the pipes are complete with decoupling fittings that are leak-free and in good condition
- the recovery equipment is in good working order, has been properly maintained and the associated electrical components are sealed to prevent a risk of ignition in the event of refrigerant leakage. If in doubt, consult the manufacturer.
- the refrigerant is returned to the supplier in the correct recovery cylinders, accompanied by the relevant waste identification form
- different types of refrigerant are not mixed in the recovery units, especially in the cylinders
- if compressors or compressor oils are decommissioned, evacuate them to an acceptable level to prevent flammable refrigerant from remaining inside the lubricant
- the evacuation procedure is carried out before returning the compressor to the suppliers
- only the electric heating on the compressor body is used to accelerate this process
- when oil is extracted from the system, it is drained using a safe procedure.

3.3.19 Transportation, marking, storage and disposal of units

- comply with current national regulations.

3.3.20 Receipt and handling

On receipt of the unit:

- check if there is refrigerant inside the packaging using an electronic leak detector suitable for the system refrigerant
- if there is, it is likely that the refrigerant circuit is damaged
- In this case, the unit must not be installed and the Technical Support Service must be called.

3.4 Safety area

Remember that:

- the unit contains highly flammable refrigerant
- there is a risk of fire and explosion
- the refrigerant must be prevented from entering the building
- the refrigerant can form a combustible atmosphere by mixing with the air
- the refrigerant has a higher density than air, in the event of a leak, spilled refrigerant can accumulate on the ground and in vents

- the safety area must not include neighbouring properties or busy public areas
- no structural changes may be made in the safety area that would breach these regulations.

Preparation of the safety area

The unit must not be near:

- windows, doors, shafts, basement entrances, hatches, skylights
- outside air inlets of ventilation systems
- canals, downpipes, manholes, pumping wells, sewerage ducting networks, etc.

The safety area must not contain ignition sources:

- sockets, light wells, lamps or power switches
- naked flames or flame bodies
- electrical appliances that are not explosion-proof, mobile devices with built-in battery (e.g. telephones, fitness watches, etc.)
- spark-generating tools
- do not use sprays or other flammable gases in the safety area
- hot surfaces with temperatures above 370 °C

3.4.1 Considering clearances and the exhaust air flow direction

Free-standing installation:

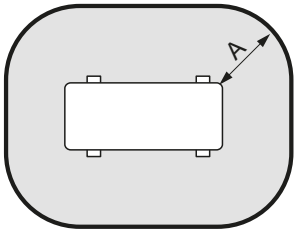

Clear space around the unit.

A	mm	1000

Ground installation in front of a wall

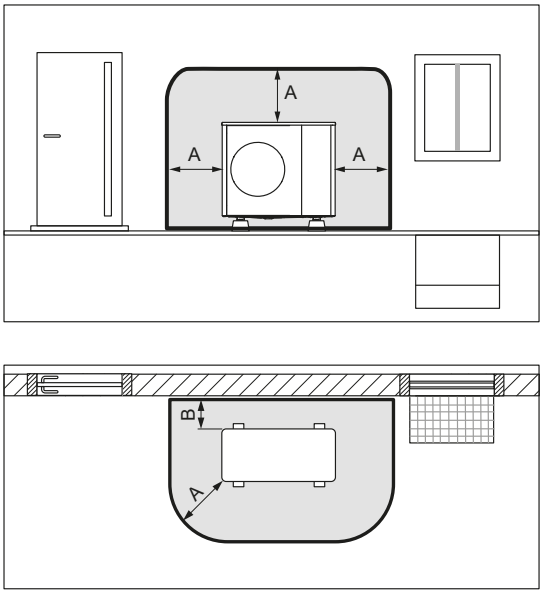

A	mm	1000
B	mm	300

Ground installation in a corner

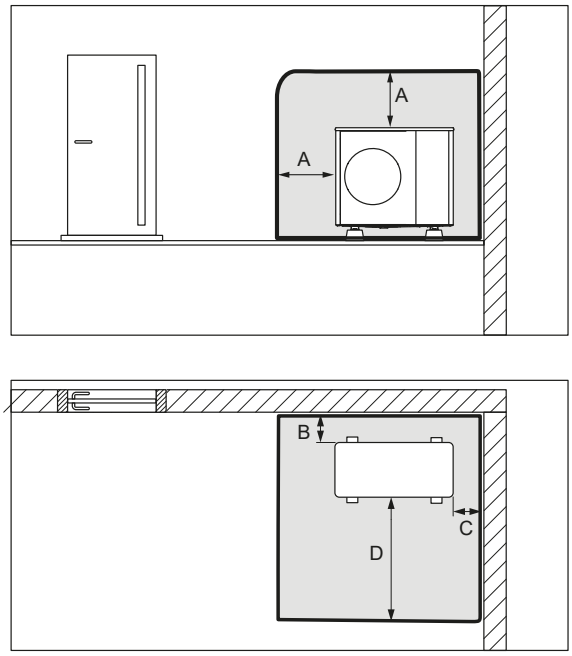

A	mm	1000	**C**	mm	500
B	mm	300	**D**	mm	2300

Suspended installation

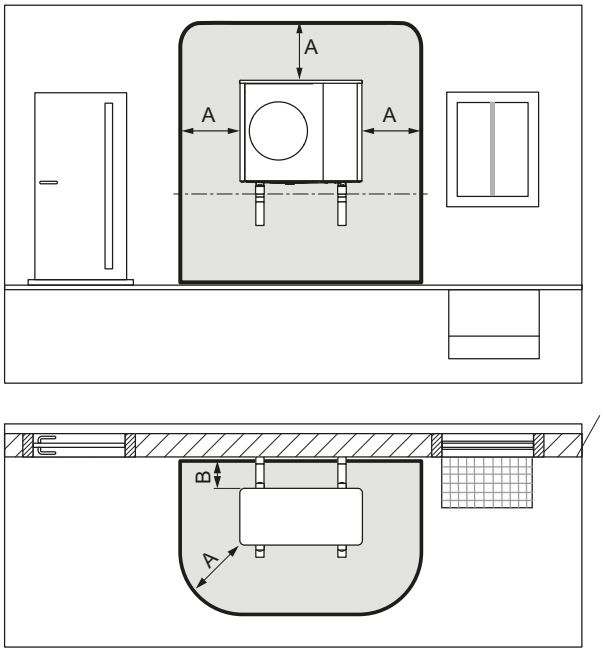

A	mm	1000
B	mm	300

The safety area is extended under the unit down to the ground.

Installation suspended in a corner

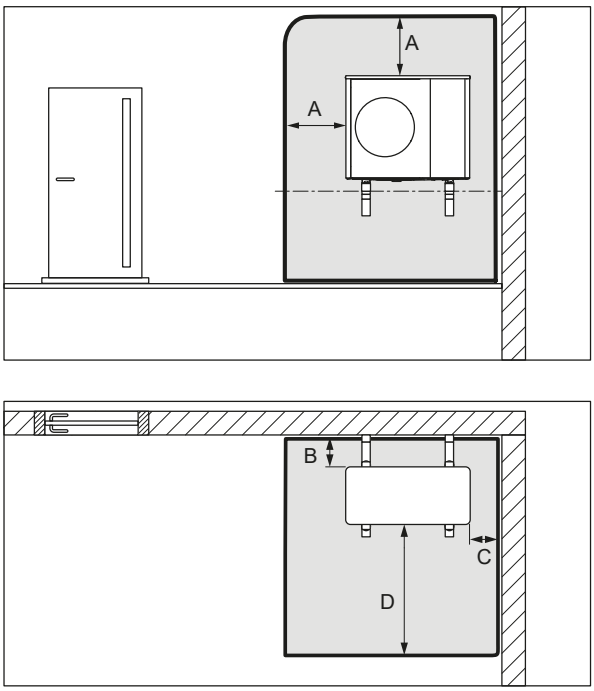

A	mm	1000	**C**	mm	500
B	mm	300	**D**	mm	2300

The safety area is extended under the unit down to the ground.

4. Presentation of the product

4.1 Identification

The serial number label is positioned on the unit and allows to identify all the unit features.
The matriculation plate shows the indications foreseen by the standards, in particular:

- unit type
- serial number
- year of manufacture
- wiring diagram number
- electrical data
- type of refrigerant
- refrigerant charge
- manufacturer logo and address

ⓘ The serial number uniquely identifies each unit and enables specific parts to be identified.

⚠ Tampering, removal, missing identification labels or anything else that does not allow the product to be safely identified, makes installation and maintenance operations difficult.

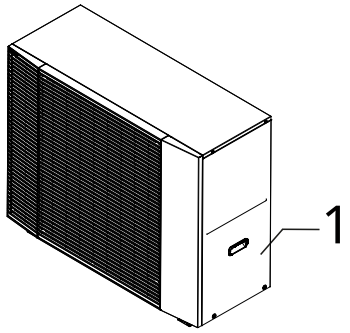

1 Serial number label

4.2 Regulatory framework

The relevant regulatory framework can be found in the declaration of conformity enclosed with this document.

4.3 Intended use

The units are designed for:

- outdoor installation
- heating or cooling water or water-glycol
- operation within the limits and with their performance characteristics set out in this document.

4.4 Description

Packaged reversible air/water heat pump for heating, cooling and the production of domestic hot water.

Configurations:

- standard: without electric heater
- optional: with integrated electric heater.

4.5 Main components

Sizes 2.1-8.1

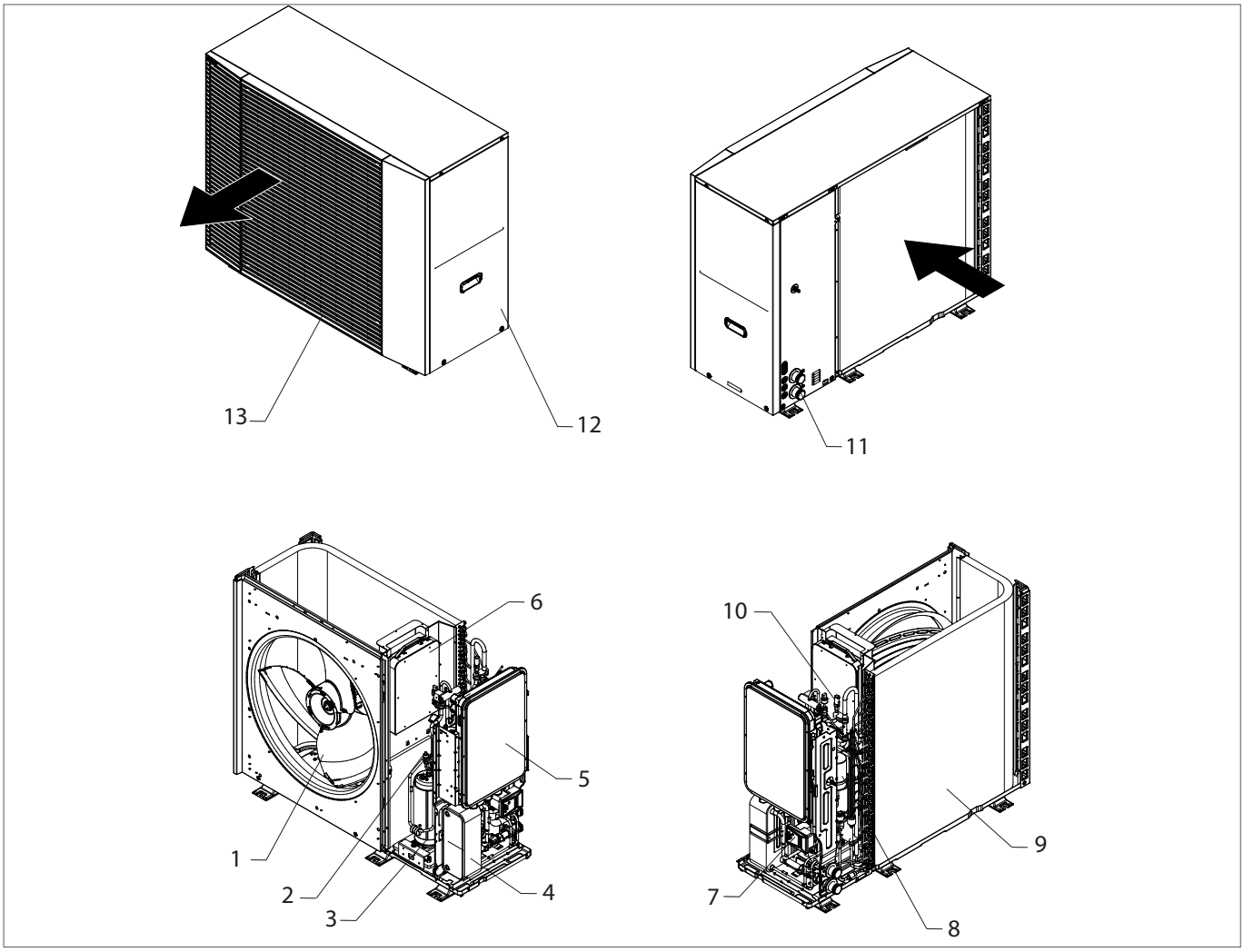

No.	Component	No.	Component
1	Fan motor	8	Liquid receiver
2	High pressure sensor	9	Source exchanger: Finned coil
3	Inverter compressor	10	Gas side pressure relief valve
4	Water side plate exchanger	11	Hydraulic connections, electrical inlets
5	Electrical panel	12	Access panel to internal parts
6	Electrical panel inverter	13	Fan grille
7	Water circulator		

ⓘ The images are provided for illustrative purposes only.

4.6 Hydraulic module

Sizes 2.1-8.1

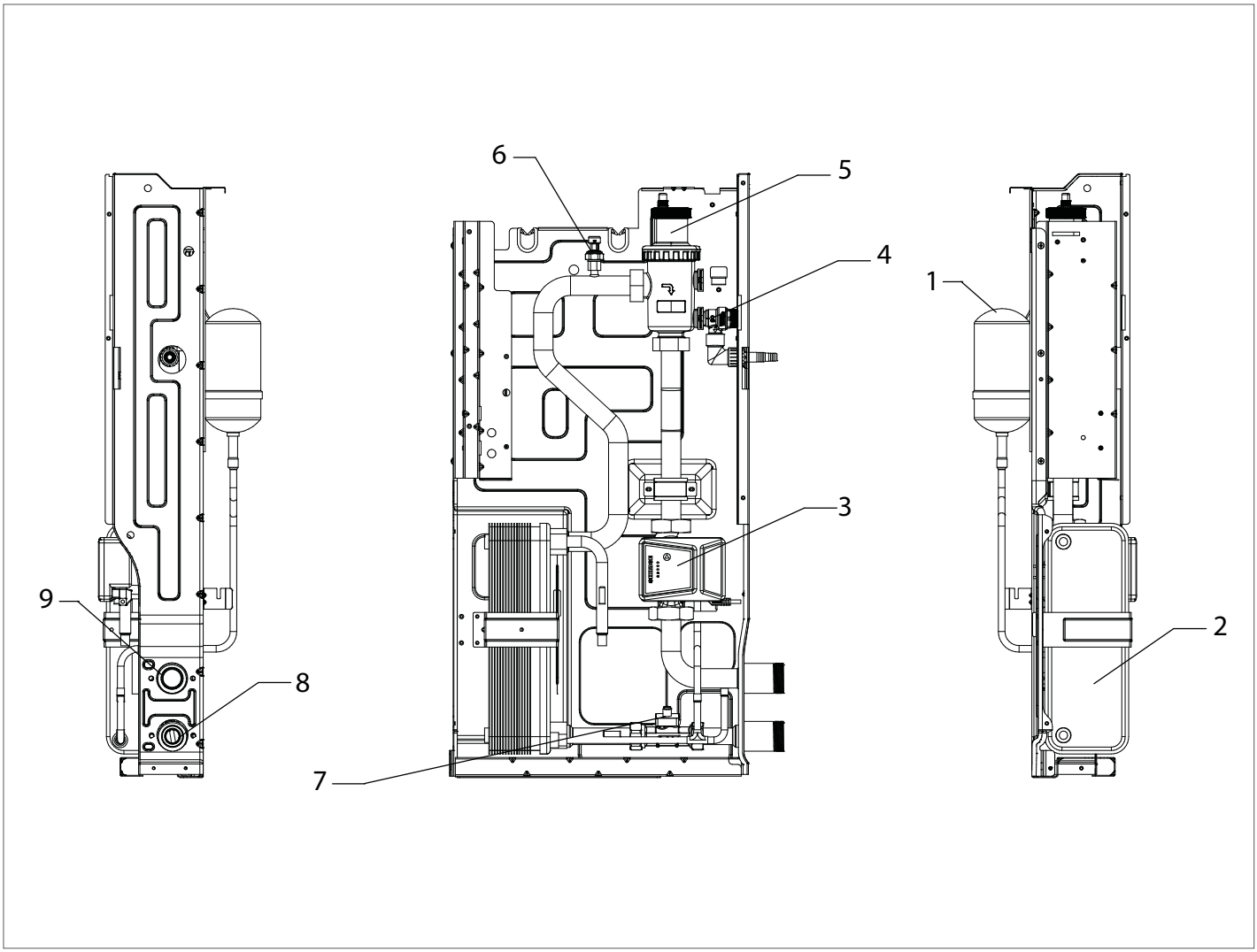

No.	Component	No.	Component
1	Liquid receiver	6	Pressure sensor
2	Plate heat exchanger	7	Compound flow meter
3	Pump	8	Water inlet pipe
4	Water side pressure relief valve	9	Water outlet pipe
5	Degasser		

ⓘ The images are provided for illustrative purposes only.

4.7 Components supplied with the unit

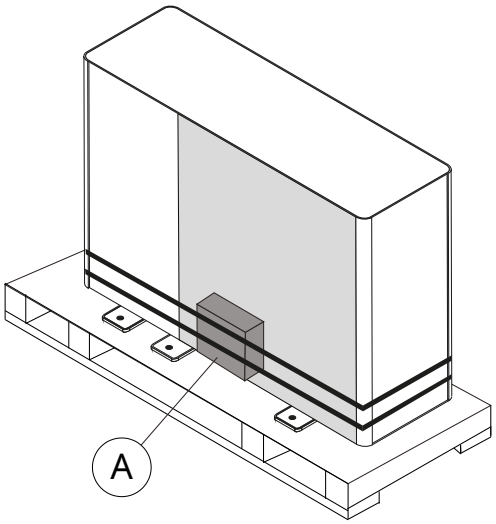

A Position of components supplied with the unit

The following components can be found in the package:

Description	Quantity
Installation and maintenance manual	1
User interface manual	1
Energy label	1
Y filter	1
Water temperature probe (for T5 / T1 / Tw2 / Tbt1 / Tsolar)	1
Condensation drain fitting	1
Cable tie	5
Termination resistor for connecting M/S units in cascade	1
Lifting protection bracket	2

4.8 Compatible accessories

The list of accessories can be found in the technical bulletin.

5. Before installation

5.1 Prerequisites

⚠ This section is intended exclusively for the Installer.

⚠ Refer to the Technical data chapter for details.

⚠ Follow the safety instructions in the "About R-290 refrigerant" chapter.

⚠ When handling the unit, use equipment appropriate to the weight of the unit.

⚠ Check that all handling equipment complies with local safety regulations (crane, forklifts, ropes, hooks, etc.).

⚠ During manual operations, it is mandatory to comply with the maximum weight per person as required by current legislation.

⚠ Provide personnel with personal protective equipment appropriate for the situation, such as hard hat, gloves, safety shoes, etc.

⚠ Observe all safety procedures in order to guarantee the safety of the personnel present and the material.

⚠ To avoid injury, do not touch the unit's air inlet or aluminium fins.

⚠ Do not use the fan grills handles to move the unit.

⚠ Keep the unit packed during handling.

⚠ Remove the packaging when you have reached the point of installation.

5.2 Reception

Before accepting the delivery, check:

- that the unit has not been damaged during transport
- that the materials delivered match those indicated on the transport document, comparing the data with the serial number label on the packaging.

In case of damage or anomaly:

- immediately write down the damage found on the transport document and quote this sentence: "Accepted with reservation due to evident shortages/damages during transport"
- contest by fax and registered mail with proof of receipt to the supplier and carrier.

ⓘ Any disputes must be made within 8 days from the date of the delivery. Complaints after this period are invalid .

5.3 Storage

Respect the indications on the outside of the pack.

In particolar:

- minimum environment temperature -25 °C (possible damage to components)
- maximum environment temperature +70 °C
- maximum relative humidity 95% (possible damages to electrical components).

⚠ The unit shall be stored in a room without continuously operating ignition sources (for example: open flames, an operating gas appliance or an operating electric heater.

5.4 Handling

The unit can be handled:

- with a hoist or crane
- with a forklift truck or pallet truck

The following examples are guidelines; the choice of means and handling modes will depend on the actual installation situation.

Position of the centre of gravity

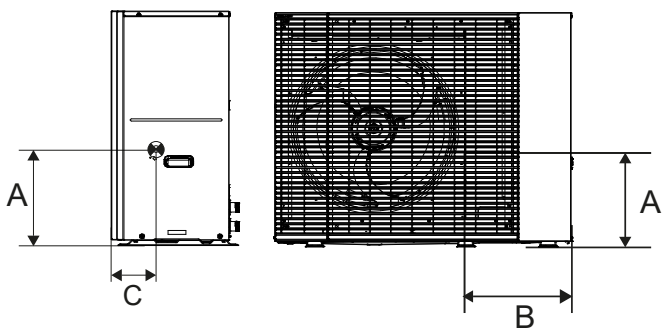

Size		A	B	C
2.1 - 8.1	mm	415	490	205

5.4.1 Lifting with a crane

⚠ Use protective elements to avoid damaging the unit.

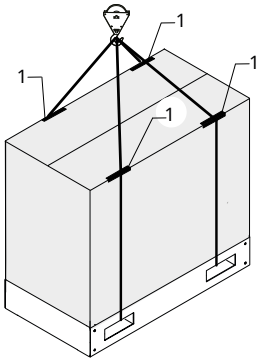

1 Protection elements

5.4.2 Lifting with a forklift truck

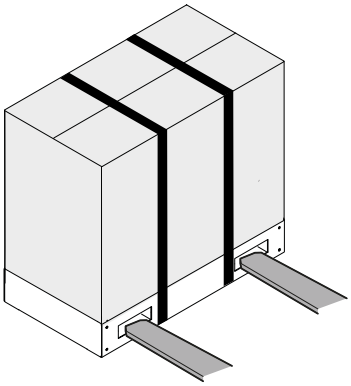

5.4.3 Lifting with a crane without packaging

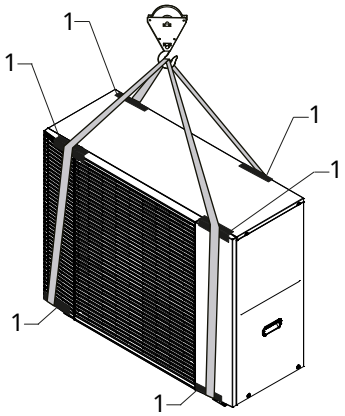

1 Suitably protect the unit to prevent damage.

⚠ When the load is lifted off the ground, stay clear of the area below and around it.

⚠ Identify critical points during handling (disconnected routes, flights, steps, doors).

⚠ Before starting the handling, make sure that the unit is stable.

⚠ The unit may not be tilted more than 15° during transport.

5.5 Removal of the packaging

On reaching the installation site.

Carry out the following procedure:

► cut the straps

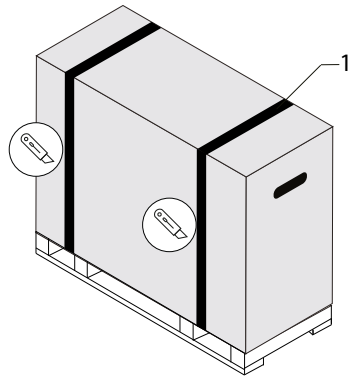

1 Traps

► lift and remove the packaging

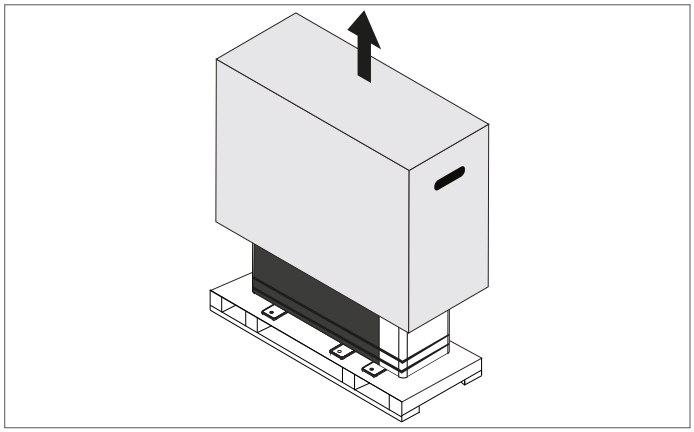

► remove the protection elements

► remove the components supplied

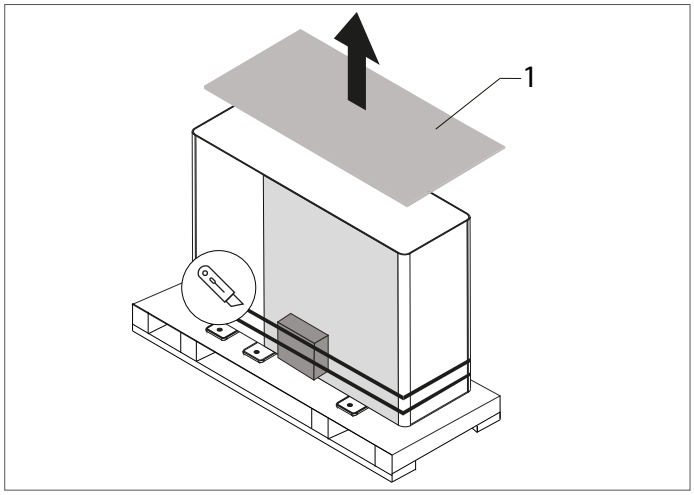

1 Protection panel

► remove the panel fixing screws

► remove the unit with suitable means

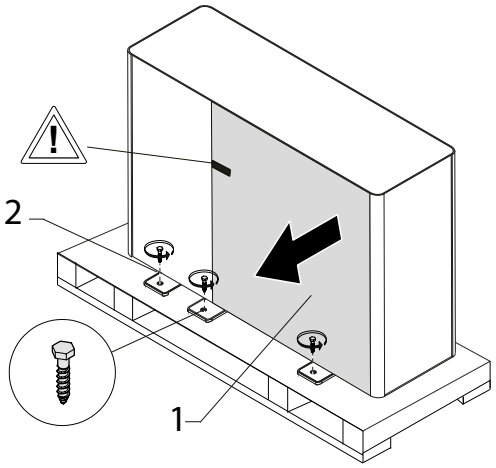

1 Protection panel

2 Fixing screws

⚠ During operations, take care not to damage the outdoor air probe.

⚠ Be careful not to damage the unit.

⚠ Keep the packaging material out of children's reach as it may be dangerous.

⚠ Recycle and dispose of the packaging material in conformity with local regulations.

⚠ Remove the battery protection panel only after placing the unit in its installation position.

6. Installation

6.1 Prerequisites

⚠ This section is intended exclusively for the Installer.

⚠ Refer to the Technical data chapter for details.

⚠ Follow the safety instructions in the "About R-290 refrigerant" chapter.

⚠ The electrical system and its components must be designed by a qualified technician who must work according to the rules of good practice and national regulations.

⚠ If the unit is installed on a roof or terrace, check its load capacity and the possibility of draining the condensate.

⚠ **Ensure that:**

- the location can be accessed safely
- the clearances are guaranteed
- a suitable place for condensate water discharge is available nearby
- install the unit raised from the ground
- the location of the unit does not disturb neighbours
- the support surface or the wall can withstand the weight of the unit
- the floor or wall section does not interfere with power lines or water piping and no load-bearing elements of the construction are compromised.

⚠ **Avoid therefore:**

- places that may be subject to flooding
- installations near bedrooms or windows
- snow accumulations obstructing air intake and exhaust
- obstacles to the airflow
- leaves or other foreign bodies that can obstruct the exchange batteries
- winds that hinder or favour the airflow
- heat or pollution sources close to the unit (chimneys, extractors, etc.)
- stratification (cold air that stagnates at the bottom)
- air circulation between supply and intake
- positioning in shafts and/or openings.

6.1.1 Windbreaks

Installing the unit in particularly windy areas may cause operating problems:

- frontal wind exceeding 5 m/s causes short circuit problems between air supply and return and a decrease in operational capacity
- frequent acceleration of the formation of ice
- Interruption of operation due to high or low pressure alarm.

⚠ **Ensure that:**

- the unit is positioned so that the air supply is at 90° to the wind direction.

⚠ When a strong and continuous wind blows against the front of the unit, the fan may start to rotate very fast until it breaks.

⚠ Provide windbreaks in front of the unit.

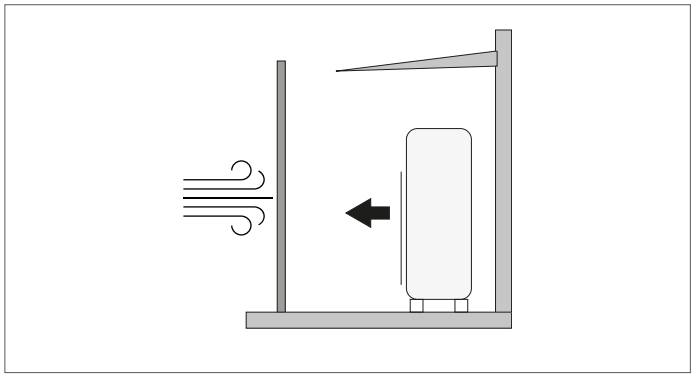

⛔ Do not install the unit in a location where the suction side may be directly exposed to wind.

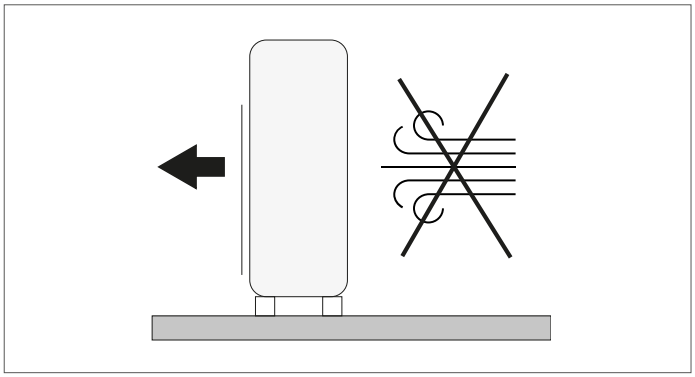

6.1.2 Protection of the external air probe from

the sun

⚠ The unit has a probe that detects the outdoor temperature and should not be exposed to direct sunlight.

⚠ Install the unit in a position sheltered from the sun or provide a canopy.

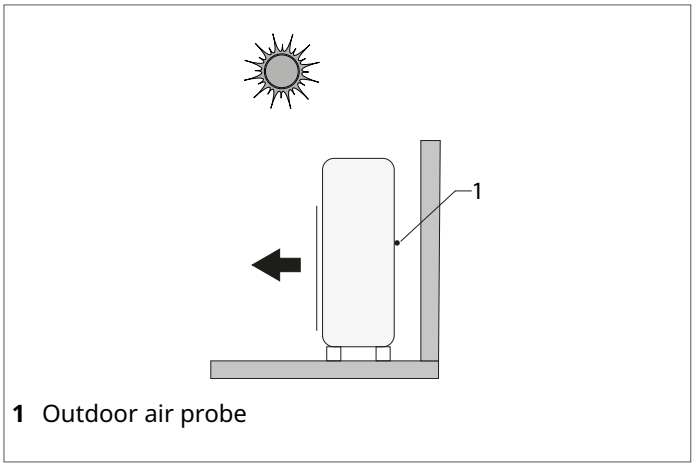

1 Outdoor air probe

6.1.3 Protection from snow accumulation

⚠ In the case of installations in locations subject to heavy snowfall, provide a raised base to prevent snow accumulations from obstructing air intake and exhaust.

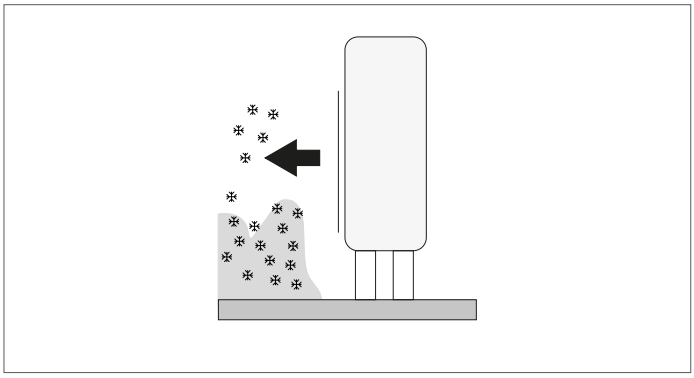

6.2 General diagram

Floor installation

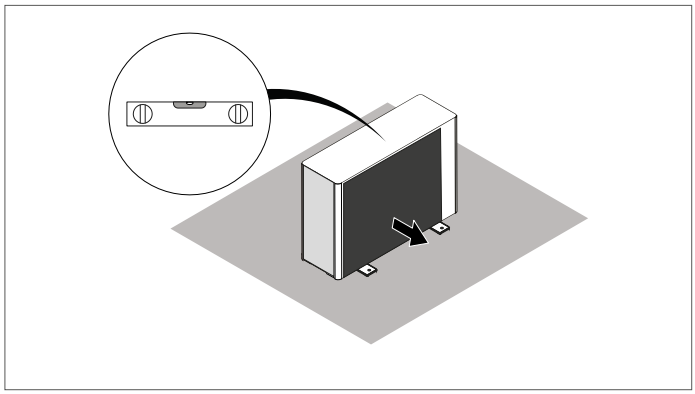

Suspended installation

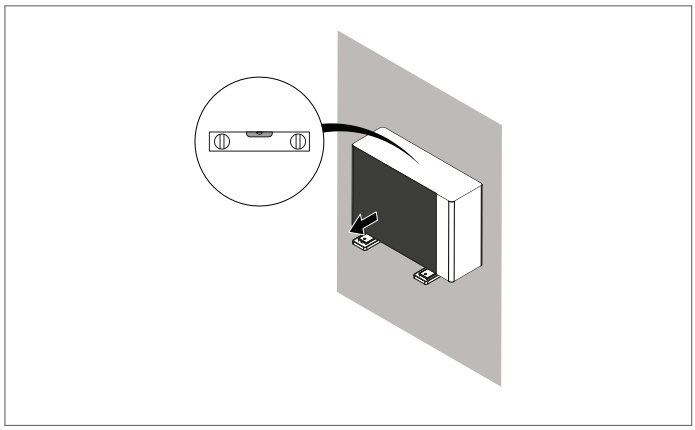

6.3 Clearances

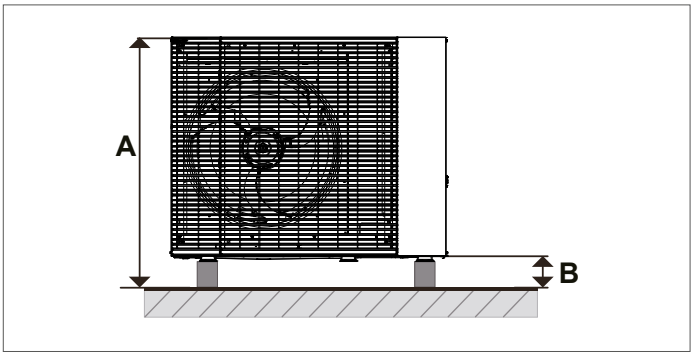

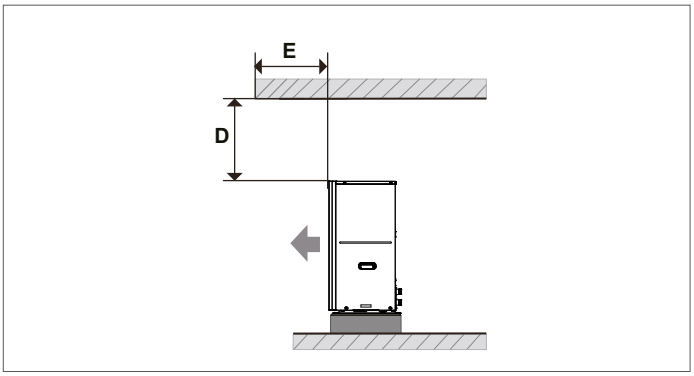

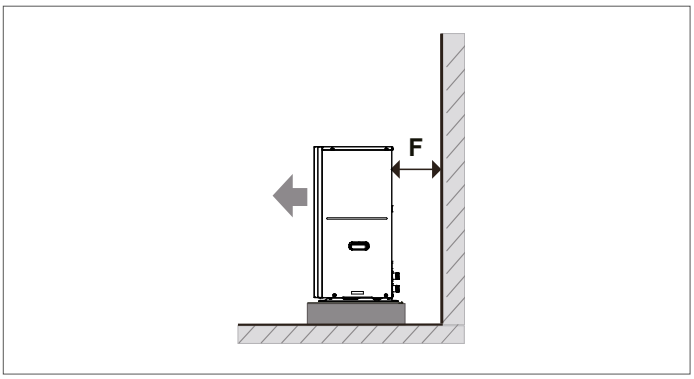

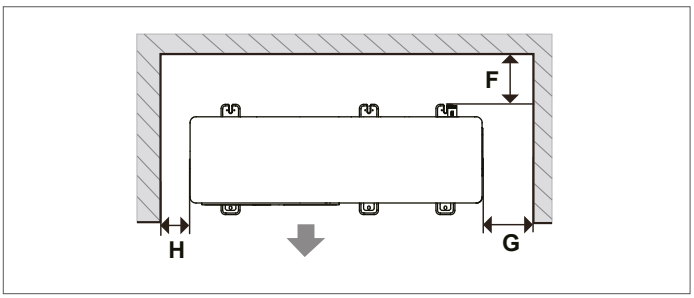

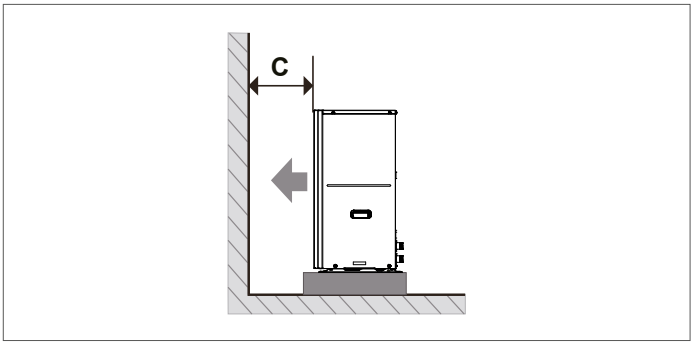

Sizes 2.1-8.1

A	mm	Unit height + B
B	mm	≥100
C	mm	≥1500
D	mm	≥500
E	mm	≤500
F	mm	≥300
G	mm	≥500
H	mm	≥500

Multiple installation

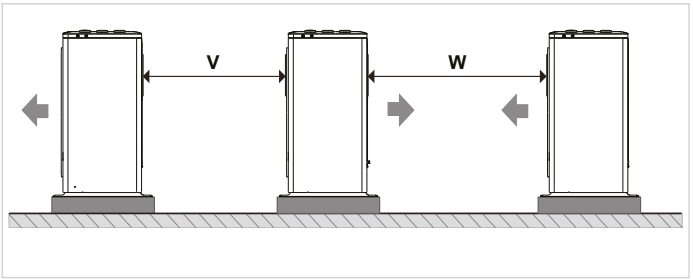

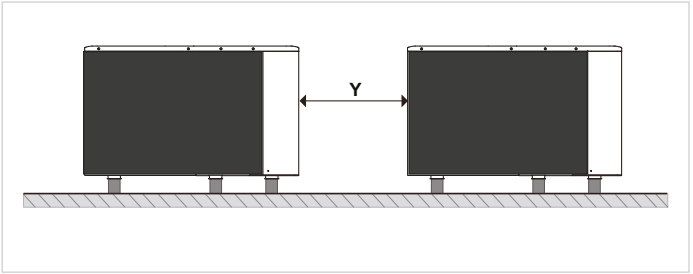

		Sizes 2.1-4.1	Sizes 5.1-8.1
V	mm	≥600	≥600
W	mm	≥2500	≥3000
Y	mm	≥500	≥500

6.4 Positioning

ⓘ Anti-vibration mounts (accessories supplied separately) are available to dampen vibrations depending on the type of installation.

ⓘ Refer to the accessory's instruction sheet

6.4.1 Floor installation

To position the unit

- ► prepare the concrete base
- ► use expansion plugs
- ► secure the unit to the base of support
- ► check the levelling

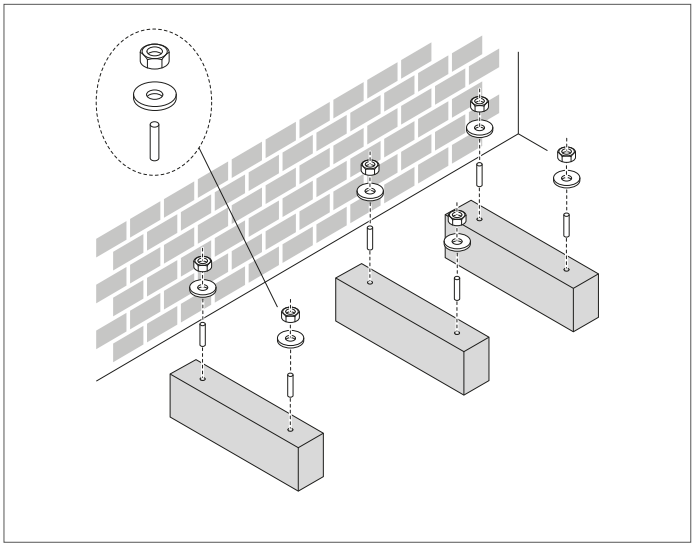

ⓘ IT is possible to install the unit without using the central support base

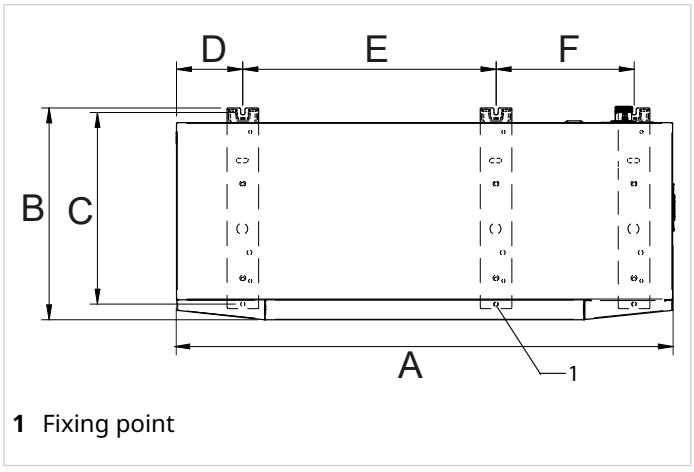

1 Fixing point

Size	A	B	C	D	E	F
2.1-8.1	1330	568	513	178	679	370

Unit fixing

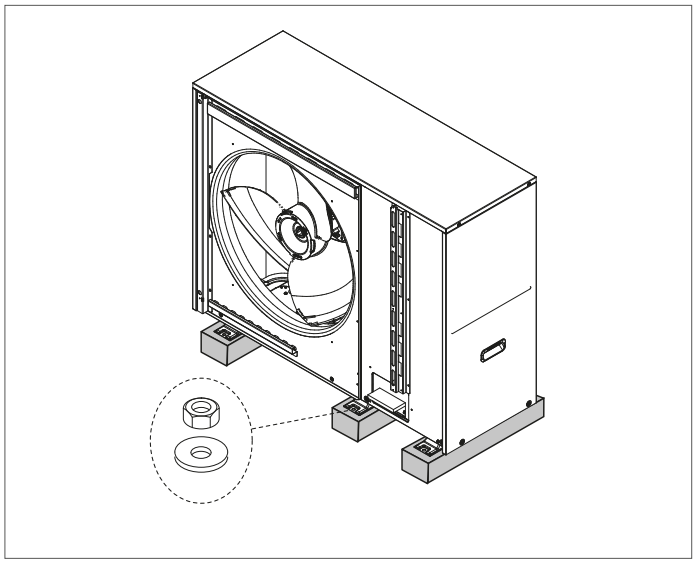

- ► install the panel
- ► install the grille

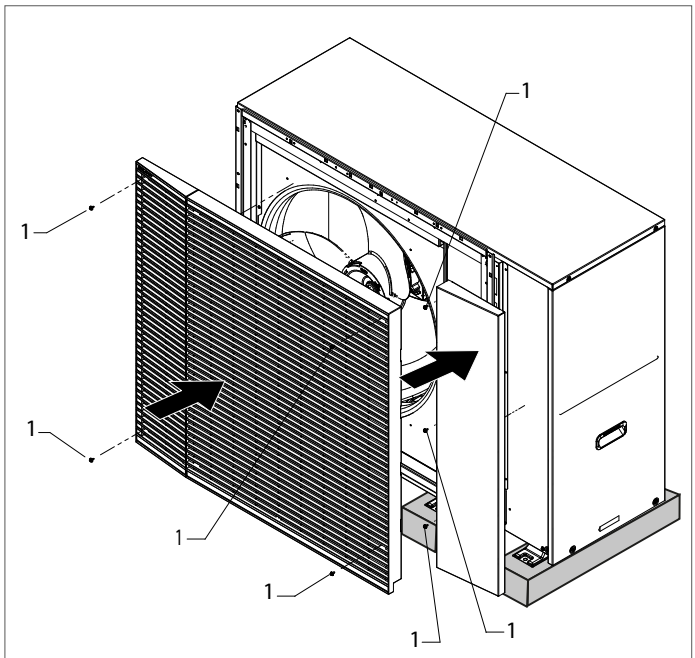

1 Fixing screws

6.4.2 **Wall-mounted installation**

There are two kits available:

- kit containing wall fixing brackets
- kit containing anti-vibration mounts

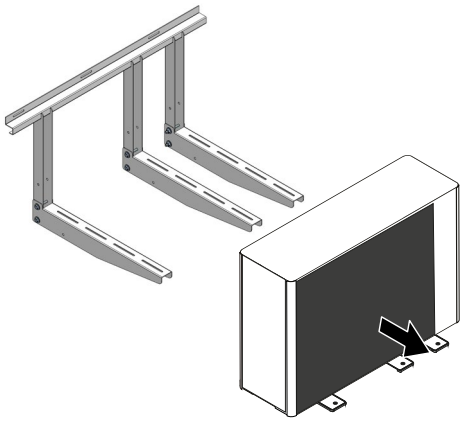

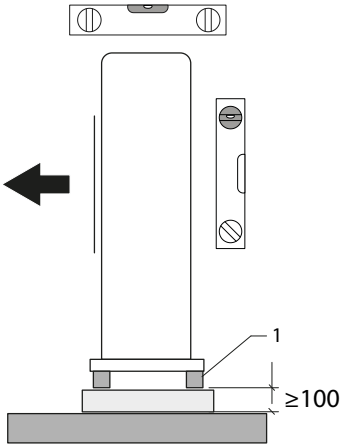

1 Anti-vibration mounts (accessories supplied separately)

Condensate drain

During winter operation the unit generates condensate, which must be directed to a suitable place for drainage. Drainage can be channelled (recommended) or free.

6.4.3 **Channelled drainage**

► use the condensation drain fitting supplied with the unit
► put it in the fitting provided at the bottom
► connect a drainpipe
► direct the drainpipe to a suitable drainage point.

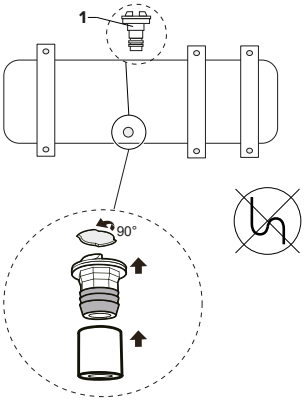

1 Condensation drain connection

⚠ Avoid siphons.

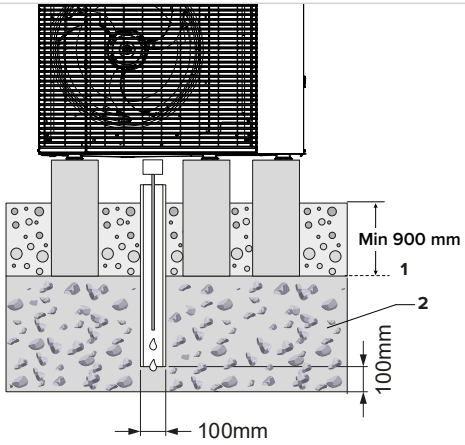

1 Frost line
2 Layer of gravel or pebbles to help with condensation drainage

⚠ To prevent the water downstream of the drain from freezing, install the pipe below the frost line.

⚠ If necessary, use heating cables with antifreeze function.

⚠ Avoid short radius bends that can cause obstructions.

⚠ Avoid possible accidental obstructions during operation.

⚠ Avoid spills in places where people pass by.

6.4.4 **Free drainage**

For installations in frost-free locations, the condensate can be drained without channelling it.
In this case:

► remove the cap from the bottom of the unit

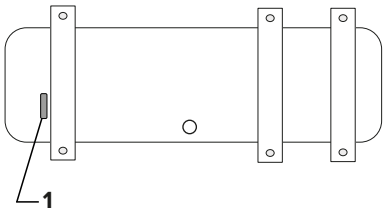

1 Drain hole covered by a rubber cap

⚠ Avoid spills in places where people pass by.

6.4.5 **Positioning on the wall**

There are two kits available:

- kit containing wall fixing brackets
- kit containing anti-vibration mounts

ⓘ Refer to the accessory's instruction sheet.

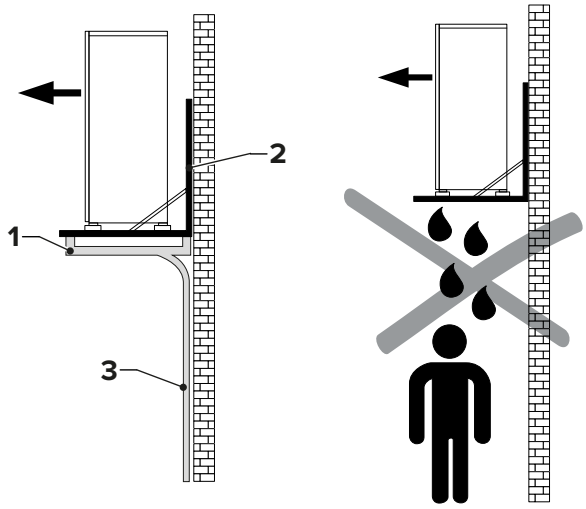

1 Drain pan (accessory supplied separately)
2 Unit support brackets (accessory supplied separately)
3 Condensation drainpipe (to be provided by the customer)

6.5 Removal of the transport bracket

All units come with a bracket that locks the compressor to prevent during transport.

⚠ **The bracket must be removed.**

To remove the bracket:

► lift the sound-absorbing panel

► unscrew the fixing screws

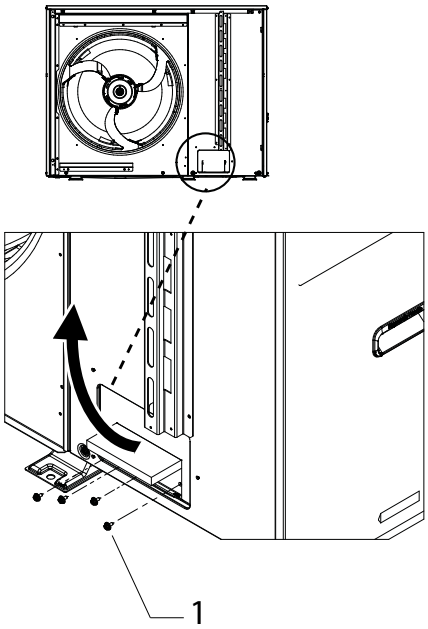

1 Fixing screws

► unscrew the fixing screws

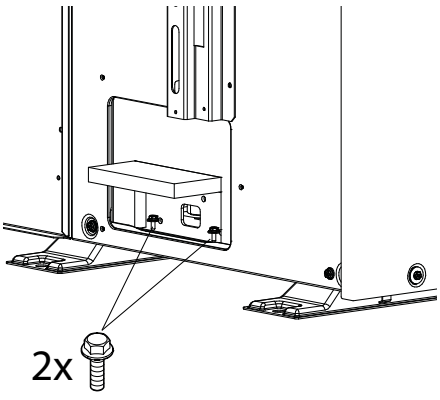

► remove the support

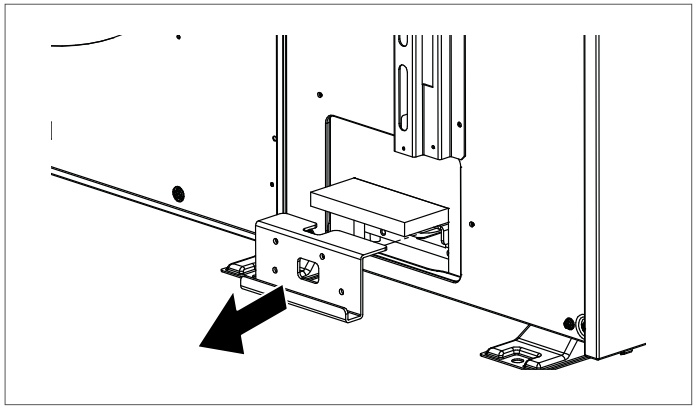

► remove the carrying bracket

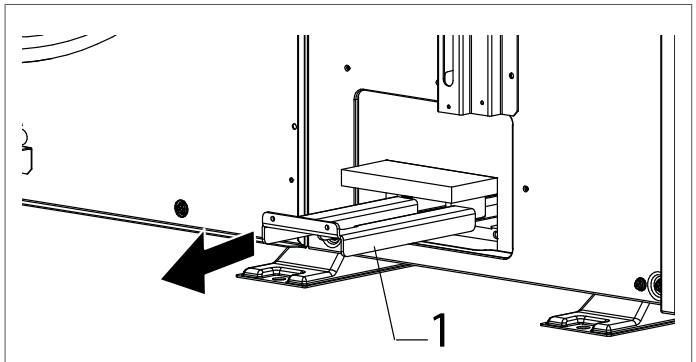

1 Transport bracket

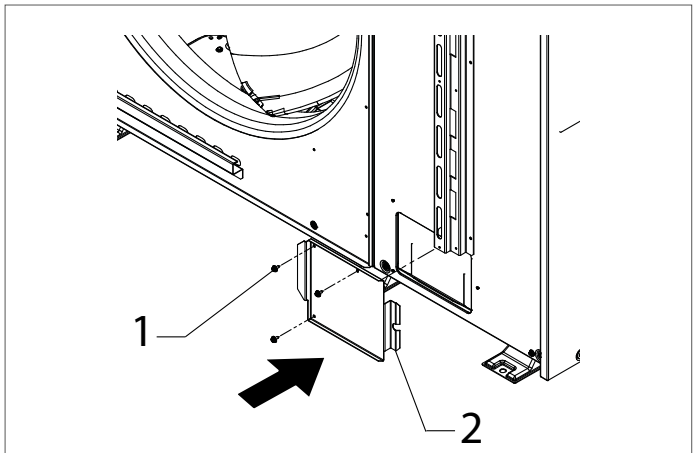

1 Fixing screws
2 Cover panel

► Install the supplied cover panel

6.6 Access to internal parts

The unit has removable access panels.

To access:

► unscrew the fixing screws
► remove the access panels

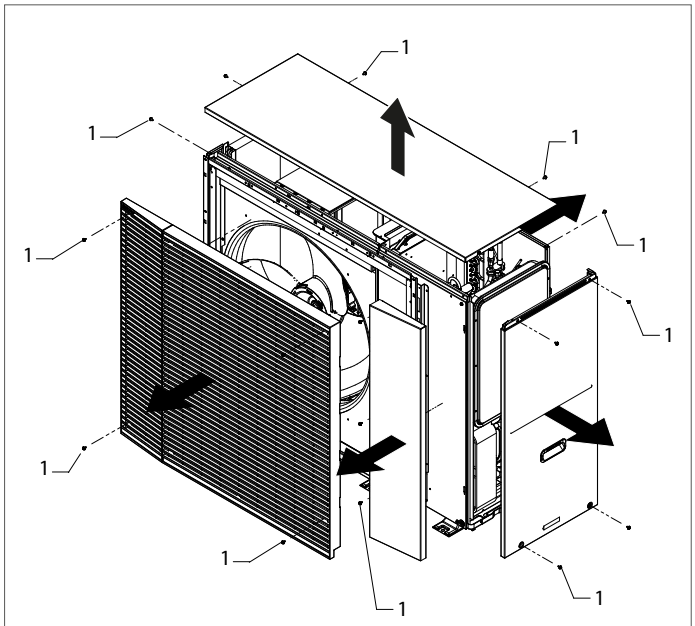

1 Fixing screws

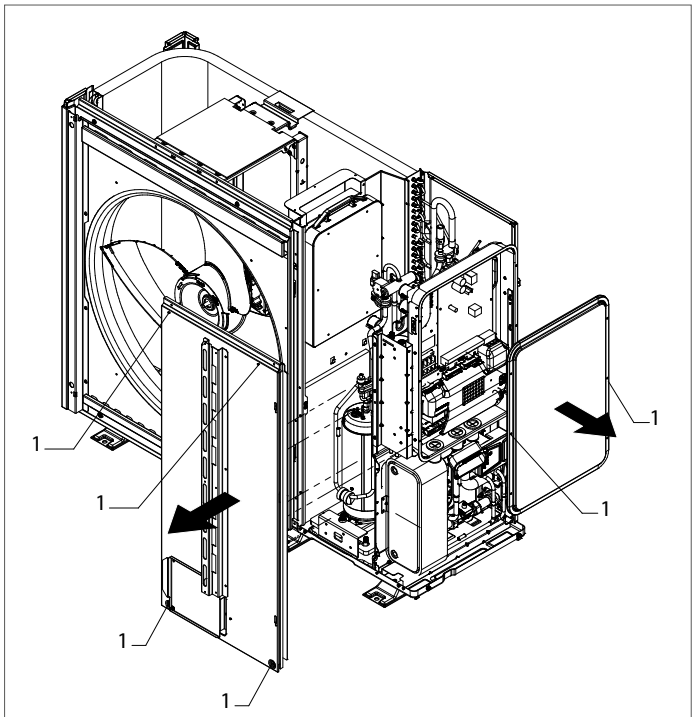

1 Fixing screws

To refit:

► repeat the operations in reverse order

7. Water connections

7.1 Prerequisites

⚠ This section is intended exclusively for the Installer.

⚠ Refer to the Technical data chapter for details.

⚠ Follow the safety instructions in the "About R-290 refrigerant" chapter.

⚠ The hydraulic system and its components must be designed by a qualified technician who must work according to the rules of good practice and national regulations.

⚠ **Check that:**

- the maximum water pressure and temperature are compatible with the operating limits of the unit
- discharge shut-off valves are installed at the lowest points of the system so that the circuit can be completely drained during maintenance
- air vents are installed at the highest points of the system, in easily accessible places
- the unit is only connected to closed hydraulic circuits.

7.2 Water flow-rate

The design water flow-rate must be:

- inside the exchanger operating limits (see chapter Technical information)
- guaranteed also with variable system conditions (for example, in systems where some circuits are bypassed in particular situations).

If the system flow-rate is below the minimum flow-rate, bypass the system as indicated in the diagram.

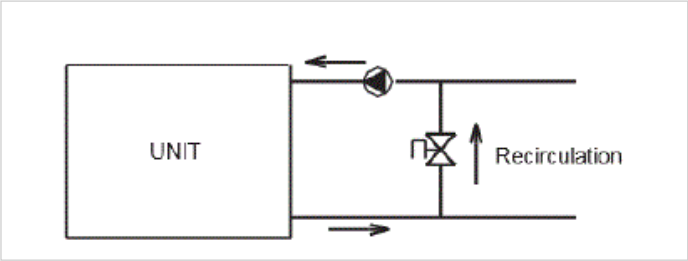

7.3 Minimum water content

Check that:

- the system complies with the minimum water content (see the Technical Information chapter)

⚠ In process applications or in environments with high thermal load, additional water may be required.

⚠ When the system has areas with remotely controlled valves, the minimum water volume must be guaranteed even when all valves are closed.

7.4 Water characteristics

The quality of the water used must be in accordance with the requirements in the following table, otherwise a treatment system must be provided.

Water component for corrosion limit on Copper	
PH (25°C)	7,5 ÷ 9,0
SO_4^{--}	< 100
HCO_3^{-} / SO_4--	> 1
Total Hardness	8 ÷ 15 °f (4.5-8.5 dH)
Cl-	< 50 ppm
PO_4^{3-}	< 2,0 ppm
NH_3	< 0,5 ppm
Free Chlorine	< 0,5 ppm
Fe_3^{+}	< 0,5 ppm
Mn^{++}	< 0,05 ppm
CO_2	< 50 ppm
H_2S	< 50 ppm
Temperature	< 80 °C
Oxygen content	< 0,1 ppm
Sand	10 mg /L 0,1 to 0,7 mm max diameter
Ferrite hydroxide Fe3O4 (black)	Dose < 7,5 mg/L 50% of mass with diameter < 10 µm
Iron oxide Fe2O3 (red)	Dose < 7,5 mg/L - Diameter < 1 µm

7.5 Cleaning

Before connecting the unit to the system:

- clean the system thoroughly with specific products to remove residues or impurities that could affect operation.

⚠ The warranty does not cover damage caused by limescale build-up, deposits and

impurities in the water and/or failure of the hydraulic circuit cleaning system.

Existing systems

If a new unit is installed in an existing system:

- the system must be flushed thoroughly to eliminate any particles, sludge and waste.

⚠ The system must be cleaned before installing the new unit.

⚠ Dirt can be removed only with a suitable water flow rate.

⚠ Each section must be cleaned separately.

⚠ Pay particular attention to “blind spots”, where a lot of dirt can accumulate due to the reduced flow-rate.

⚠ If necessary, install an additional filter sized according to the type of pollutant to be removed.

7.6 Piping insulation

Isolate the entire hydraulic circuit, including all components to avoid:

- the formation of condensation during cooling
- the reduction of heating and cooling capacity
- the freezing of external water pipes in winter.

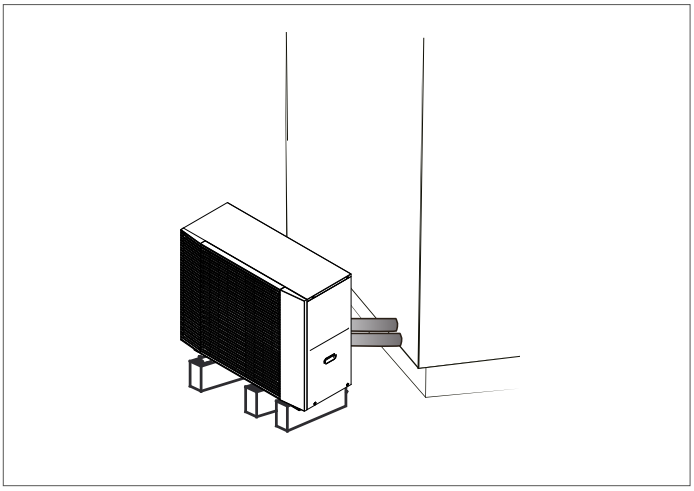

7.7 Hydraulic circuit antifreeze protection

Outdoor temperatures close to zero can cause the water in the piping and in the unit to freeze.

⚠ Frost can lead to irreversible damage to the unit.

⚠ Damage from freezing is not covered by the warranty.

To avoid freezing problems:

- mix the water with glycol, or
- protect the piping with heating cables laid under the insulation, or
- empty the system in the event of long downtime

⚠ If the unit is not started for a long time, make sure it powered on and stand-by.

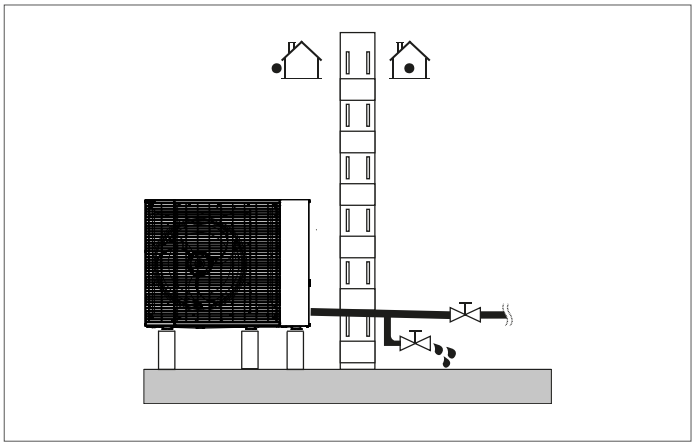

⚠ If the power supply has to be disconnected water in the circuit must be drained so that the unit and piping are not damaged by freezing.

⚠ Do not reconnect the unit if there is no water in the circuit.

⚠ In the event of an electric leakage or power failure, the freezing protection functions cannot be activated.

7.7.1 Antifreeze solutions

For the use of freezable solutions, follow the manufacturer's instructions.

ⓘ The use of unfreezable solutions causes an increase in pressure drops and a reduction in performance.

ⓘ For details, refer to the technical bulletin.

⚠ The type of glycol used must be inhibited (non-corrosive) and compatible with the hydraulic circuit components.

⛔ Do not use different glycol mixtures (e.g. ethylene with propylene).

⚠ Glycol is a toxic fluid, should not be discharged freely it must be collected and possibly reused.

7.8 Automatic frost protection valves

Automatic frost protection valves are used to drain water from the circuit, preventing freezing.
Install the valves in all the lowest points of the system (refer to the accessory's instruction sheet).

⚠ If water with glycol is used in the system, do not install frost protection valves because they could drain the system.

7.9 Position of connections

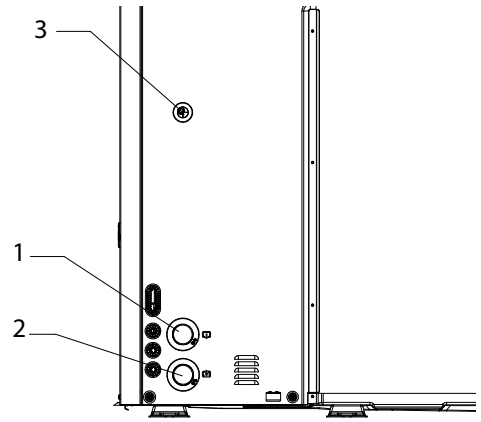

1 1 1/4" system supply
2 1 1/4" system return
3 Water side safety valve Ø 16mm

7.10 Hydraulic connection

Ensure that:

- clean piping with no moisture, air, dirt or dust is used
- the end of the pipe is kept downwards when removing burrs
- the end of the pipe is covered when passing it through a wall to prevent dust and dirt from entering
- thread sealant is used to seal the connections that must withstand the pressures and temperatures of the circuit
- the two types of materials are isolated from each other to prevent galvanic corrosion when using non-copper metal piping
- the piping is not deformed by using excessive force or unsuitable tools during connection: this could cause the unit to malfunction.

⚠ Always use the wrench and counter wrench method in tightening operations.

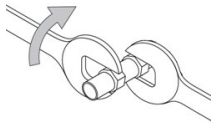

7.11 Water filter

A water filter is supplied with the unit.
As an option, a sludge remover filter is available as an accessory.

⚠ Installation of the filter is mandatory.

⚠ Operation without a filter can cause irreversible damage to the unit.

⚠ Operation without a filter will void the warranty.

Remember that the filter must be:

- installed in unit input
- easily accessible for maintenance work

⚠ Periodically check for clogging.

⛔ The filter should never be removed.

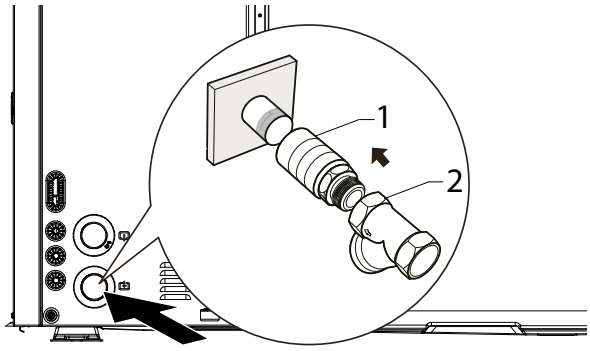

1 Piping
2 Water filter

7.12 Water side pressure relief valve

The outlet of the pressure relief valve must be connected to a suitable collection system.
Discharge in pressure 3 bar,

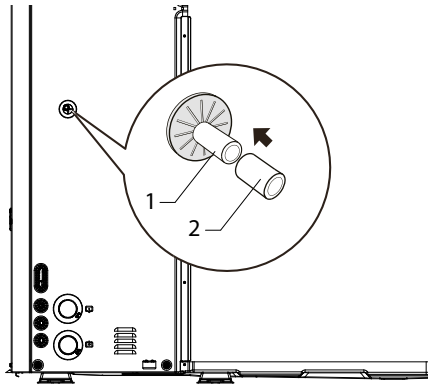

1 Pressure relief valve connection Ø 16mm
2 Drain pipe (not supplied)

7.13 Loading the plant

Once the hydraulic connections have been completed, the system can be charged.

Before charging:

- ► turn the system's main switch to "off"
- ► check that the system shut-off valve is closed
- ► open all of the system and terminal relief valves
- ► open the unit's automatic air relief valve.

To fill the system:

- ► start filling, slowly opening the water shut-off valve

When water starts coming out of the air relief valves:

- ► close the valves
- ► continue filling up to the system pressure
- ► check the hydraulic tightness of the connections.

⚠ Repeat this operation after the unit has been operating for a few hours.

ⓘ Check the system pressure periodically.

ⓘ The system refills when the unit is off (pump OFF).

⚠ If present, the DHW tank should only be filled when starting the unit.

⚠ If the system remains charged and inoperative at outside temperatures close to zero, freezing problems may occur.

⚠ Refer to the Hydraulic Circuit Frost Protection chapter.

8. Electrical connections

8.1 Prerequisites

⚠ This section is intended exclusively for the Installer.

⚠ Follow the safety instructions in the "About R-290 refrigerant" chapter.

⚠ The electrical system and its components must be designed by a qualified technician who must work according to the rules of good practice and national regulations.

⚠ All electrical operations should be performed by trained personnel having the necessary requirements by the regulations in force and being informed about the risks relevant to these activities.

⚠ Operate in compliance with safety regulations in force.

⚠ The power cables and the protection cable section must be defined in accordance with the characteristics of the protections adopted.

⚠ The protection devices of the unit power line must be able to stop the presumed short circuit current, whose value must be determined in function of system features.

⚠ Refer to the unit electrical diagram (the number of the diagram is shown on the serial number label).

⚠ verify that the network has characteristics conforming to the data shown on the serial number label.

⚠ Before starting work, verify that the sectioning device at the start of the unit power line is open, blocked and equipped with cartel warning.

⚠ The unit's power supply line must be equipped with an all-pole disconnection device of overvoltage category III."

⚠ The protection must be sized in accordance with the electrical data declared by the manufacturer.

⚠ Disconnect the power supply before making any connections and wait 10 minutes so that the DC bus capacitors of the compressor inverter are correctly at a low residual voltage.

⚠ Do not crush cable bundles and prevent them from coming into contact with piping and any sharp edges.

⚠ Primarily you have to realize the earthing connection.

⚠ Incorrect grounding may cause electric shocks.

⚠ Install an earth leakage breaker,

⚠ Failure to observe this precaution may result in electric shocks.

⚠ Power and signal cables should be routed as separately as possible to avoid any interference.

⚠ For the electrical connection, use a cable of sufficient length to cover the entire distance without any connection work. Do not use extension cords. Do not apply other loads on the power supply.

⚠ If the power cable is damaged, it must be replaced by qualified personnel and in accordance with current national regulations.

⚠ The manufacturer is not liable for any damage caused by failure to install a grounding system or failure to comply with the diagrams.

⚠ Check the voltage values which must be within the limits: 220-240V +/- 10% and 380-415V +/- 6%.

⚠ Before power the unit, make sure that all the protections that were removed during the electrical connection work have been restored.

⛔ It is forbidden to connect the earth wire to gas or water pipes, lightning rods or telephone ground.

Remember that:

- the unit must be earthed
- all external high voltage loads, if connected to a metal fitting or grounding port, must be earthed
- the current required for each external load must be less than 0.2 A. If the current required for a single load is greater than 0.2 A, insert a contactor for control
- as an example, the ports on terminals “AHS1” “AHS2”, “A1” “A2”, “R1” “R1” and “DTF1” “DTF2” only provide the switch signal

⚠ Refer to “Connection terminal block” for the location of the ports in the unit.

⚠ All cables are connected to high voltage lines with the exception of the thermistor cable and user interface cable.

8.2 Cable inlet

To access the panel, see the “Access to internal parts” section

⚠ Before removing the panel from the electrical panel, disconnect the power supply to the unit, to the backup heater, to the domestic hot water tank and to all the other electrically powered components.

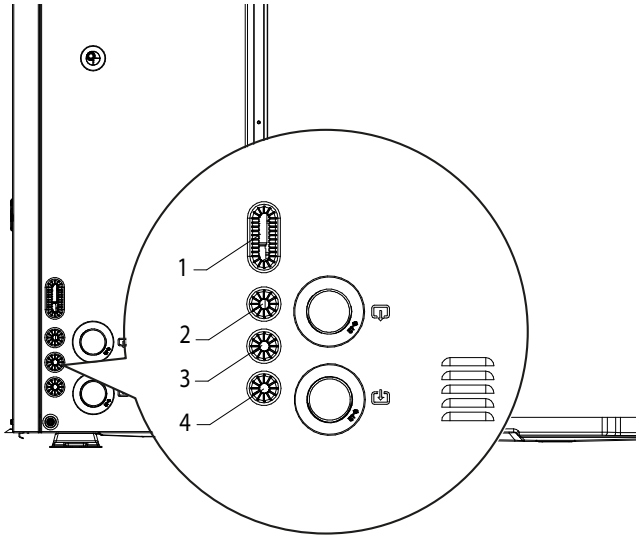

1 Hole for high voltage cable
2 Hole for high voltage cable
3 Hole for high voltage cable
4 Hole for low voltage cable (control and signal wires)

Cable entry in the electrical panel

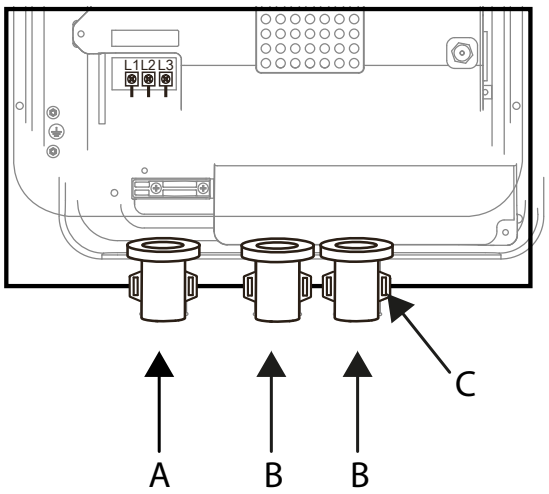

A Power supply inlet
B Signal inlet
C Cable clamps

⚠ After energising, wait 10 minutes for compressor inverter DC bus capacitors to discharge.

⚠ The external backup heater requires a dedicated electric circuit.

⚠ Installations with domestic hot water tank (available as an option) and external backup heater require a dedicated electric circuit for the booster heater. See the accessory sheet for the domestic hot water tank.

⚠ Connect as shown in the wiring diagrams.

8.3 Connecting the power supply

⚠ **Ensure that:**

- no cables of different cross-sections are connected to the same power supply terminal block (loosening of the power supply wires could cause overheating)
- terminal block screws are not over-tightened
- an earth leakage breaker and a fuse or magnetothermic circuit breaker are connected to the supply line.

8.3.1 Single-phase units

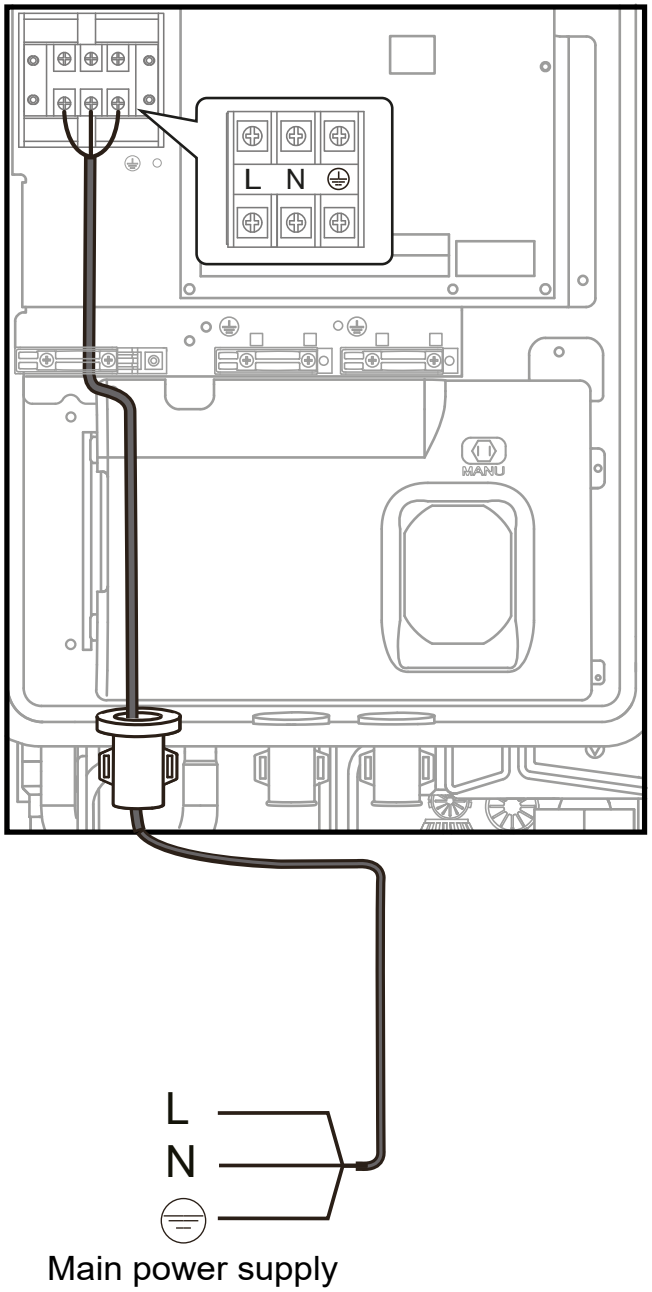

8.3.2 Single-phase units with electrical resistance

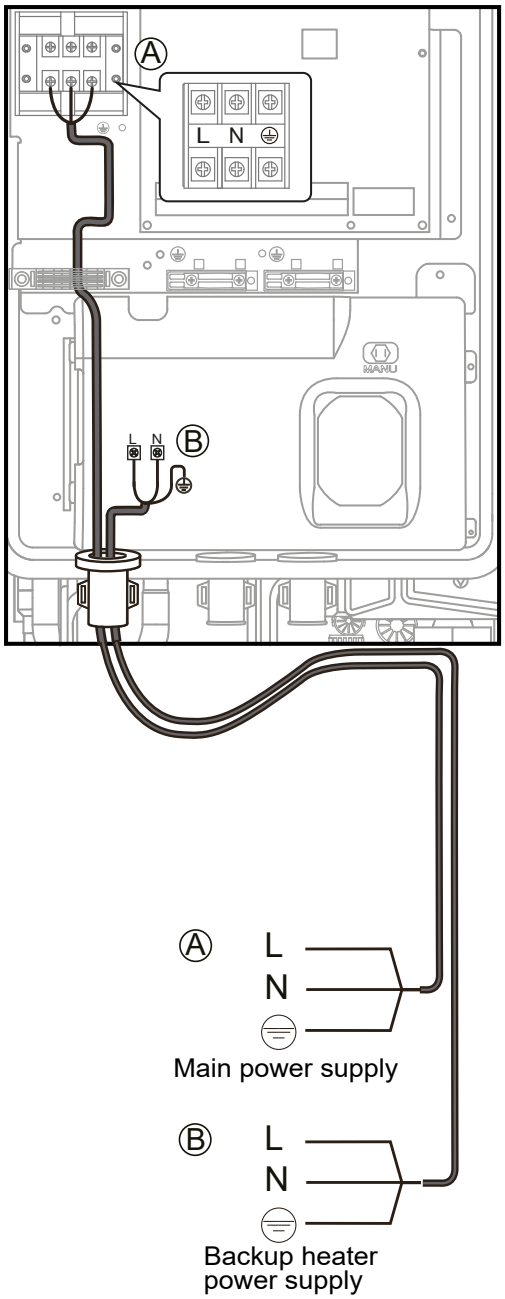

8.3.3 Three-phase units

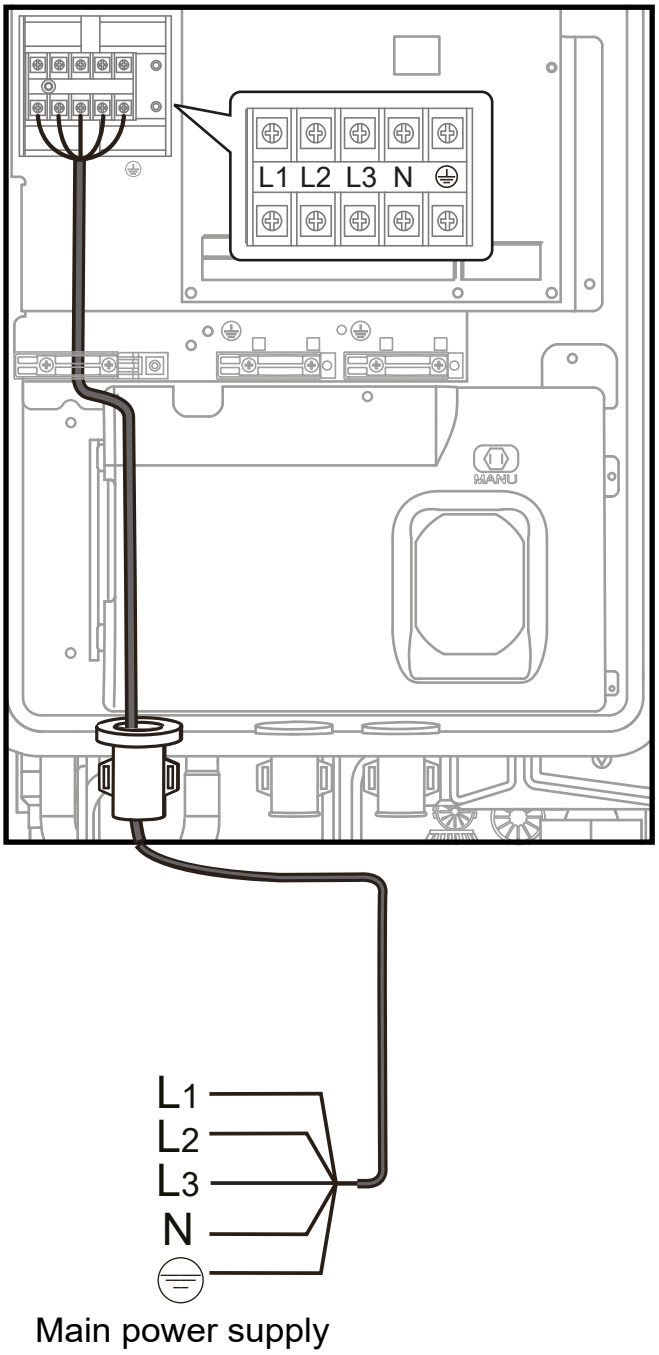

8.3.4 Three-phase units with electrical resistance

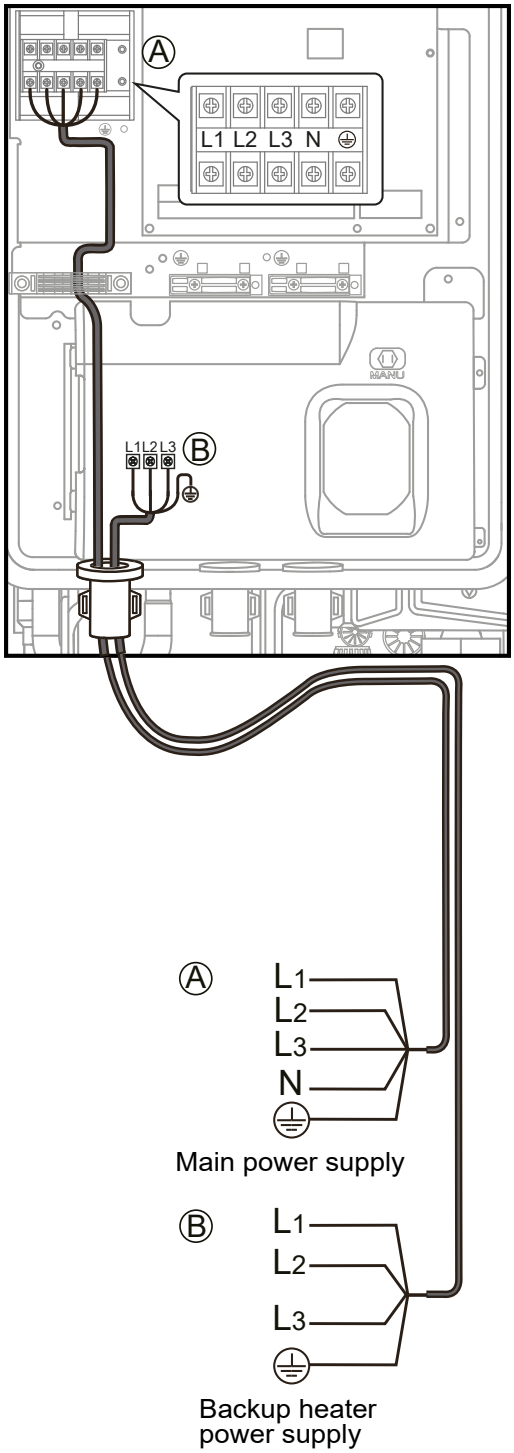

8.3.5 Electric cable sizes

8.3.5.1 Standard Units

Size	2,1	3,1	4,1	5,1
FLA (A)	12	13,5	18	19,5
Min. cable section (mm^2)	(2+PE) x (4-6)			

Size	4.1T	5.1T	6,1	7,1
FLA (A)	6	6,5	26	27,5
Min. cable section (mm^2)	(4 + PE) x (1.5-2.5)		(2 + PE) x (6-10)	

Size	8,1	6.1T	7.1T	8.1T
FLA (A)	29,5	9	9,5	10
Min. cable section (mm^2)	(2 + PE) x (6-10)	(4 + PE) x (2.5-4)		

F.L.A.: full load ampere, absorbed current at maximum admitted conditions

Cable dimensions with electrical resistance (optional)

Resistance	Power supply	Maximum circuit current (A)	Section minimale (mm^2)
3 kW	220-240 V~ 50 Hz	13,5	(2+GND) x (4-6)
9 kW	380-415 V 3 N~50 Hz	13,5	(2+GND) x 4

Tightening torques

	Tightening torque (N•m)
M4 (power terminal, electric control board terminal)	from 1.2 to 1.4
M4 (earthed)	from 1.2 to 1.4

ⓘ The values given are maximum values. Refer to the electrical data for the exact values.

ⓘ For the sizing values of the external protections, refer to the rated electrical data (bulletin, labels).

⚠ The earth leakage breaker must be a 30 mA (<0.1 s) fast tripping type.

Connection procedure:

- ► connect the cables to the appropriate terminals as shown in the diagram
- ► secure the cables with cable clamps.

8.4 External component connections

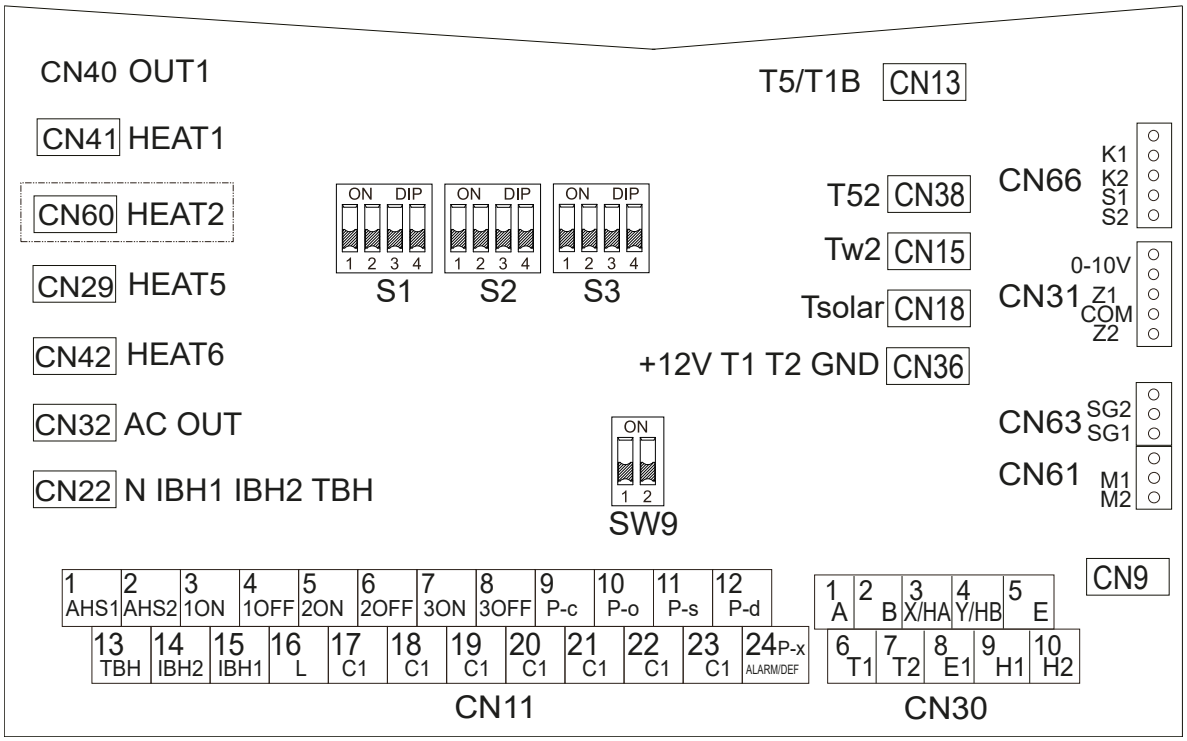

Ref.	Terminal block CN11			
1	1	AHS1	Additional boiler	Voltage contact
	2	AHS2		
2	3	1ON	SV1 DHW 3-way valve	Voltage contact
	4	1OFF		
	17	C1		
3	5	2ON	SV2 area 2-way valve	Voltage contact
	6	2OFF		
	18	C1		
4	5	2ON	SV3 area 2 3-way mixing valve	Voltage contact
	7	3ON		
	19	C1		
5	9	P_c	pump P_c (zone2)	Voltage contact
	20	C1		
6	10	P_o	pump P_o (zone1)	Voltage contact
	21	C1		
7	11	P_s	Solar pump P_s	Voltage contact
	22	C1N		
8	12	P_d	DHW recirculation pump	Voltage contact
	23	C1		
9	13	TBH	TBH heater	Voltage contact
	16	L		
10	15	IBH1	External backup heater	Voltage contact
	17	C1		

Ref.	Terminal block CN11			
11	23	C1	Defrosting status or alarm status	Voltage contact
	24	P_x		
Ref.	**Terminal block CN30**			
12	3	X/HA	Wired controller	Dry contact
	4	X/HB		
13	9	H1	M/S connection for units in cascade	Dry contact
	10	H2		
Ref.	**Terminal block CN31**			
14	-	Z1	Room thermostat (220V)	Dry contact
	-	COM		
	-	Z2		
Ref.	**Terminal block CN61**			
15	-	M1	Remote ON/OFF	Dry contact
	-	M2		
Ref.	**Terminal block CN66**			
16	-	S1	Solar input	Dry contact
	-	S2		
Ref.	**CN13**			
17	-	T5	DHW tank temperature probe	Dry contact

ⓘ External electrical components KM..., Fuses, etc. are to be provided by the customer.

8.4.1 3-way valve

Contact type	220-240 VAC
Maximum tripping of protections (A)	0.2
Cable cross-section (mm^2)	0.75

SV1 = 3-way circuit/DHW diverter valve

Cable connection

connector	3	brown
connector	17	blue
connector	4	black

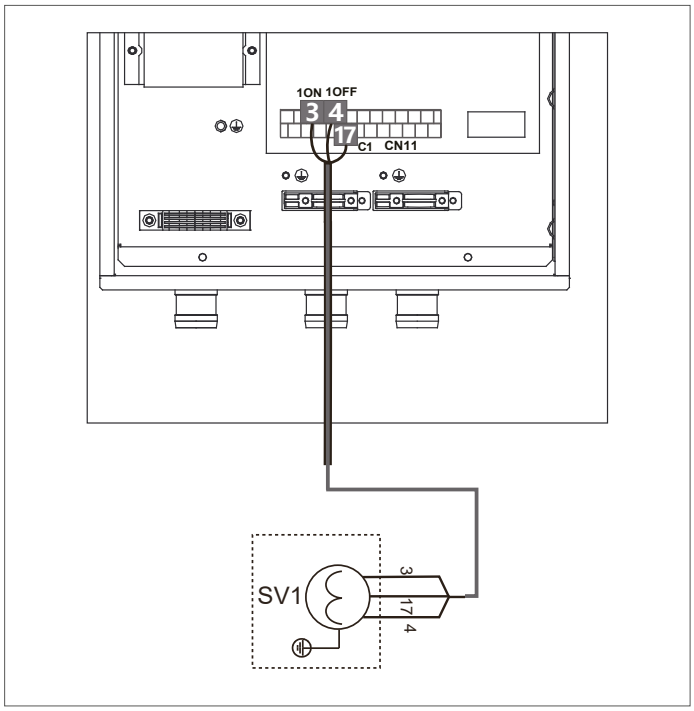

Valve connections not supplied by the company

		DHW	Hot/Cold
connector	3	voltage	no voltage
connector	4	no voltage	voltage
connector	17	neutral	neutral

ⓘ Refer to the valve instructions for connections.

SV2 = 3-way diverter valve for direct double zone systems

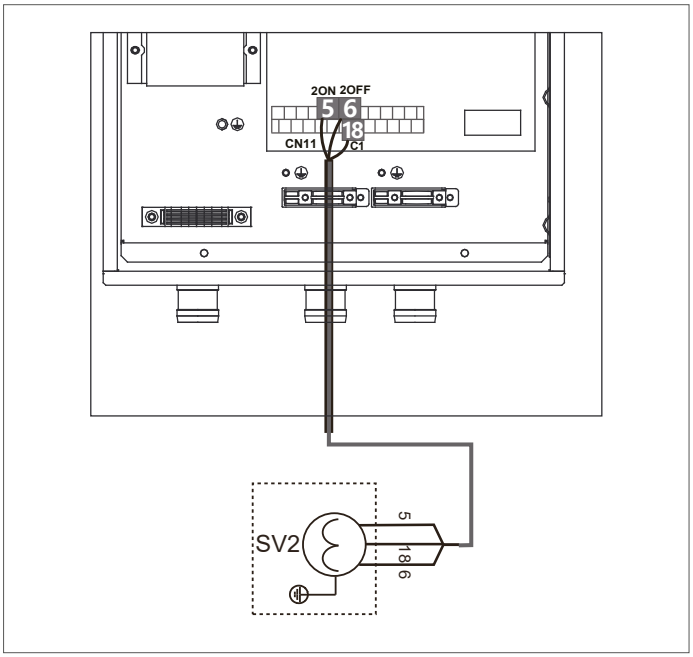

SV3 = 3-way mixing valve for mixed circuit

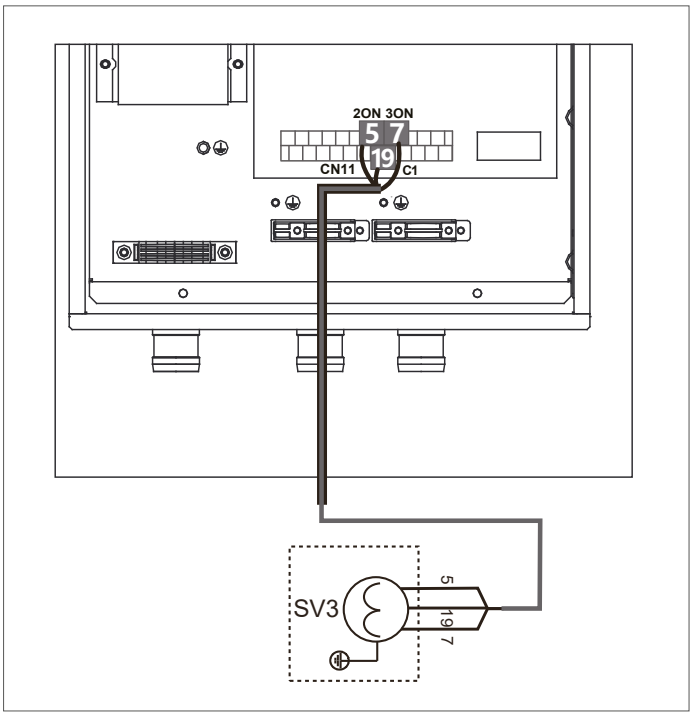

8.4.2 Additional pumps

Mixing pump P_c (Zone 2)

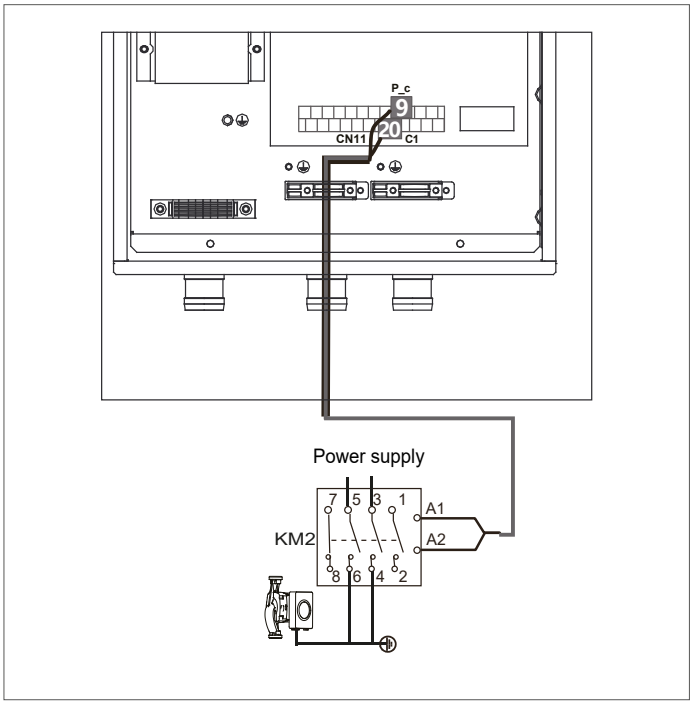

Solar pump P_s

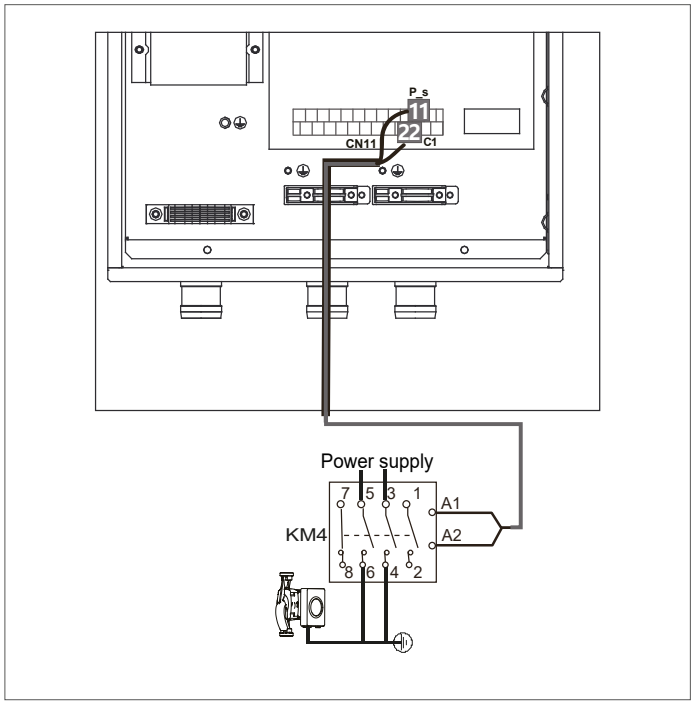

Secondary circuit pump P_o (zone 1)

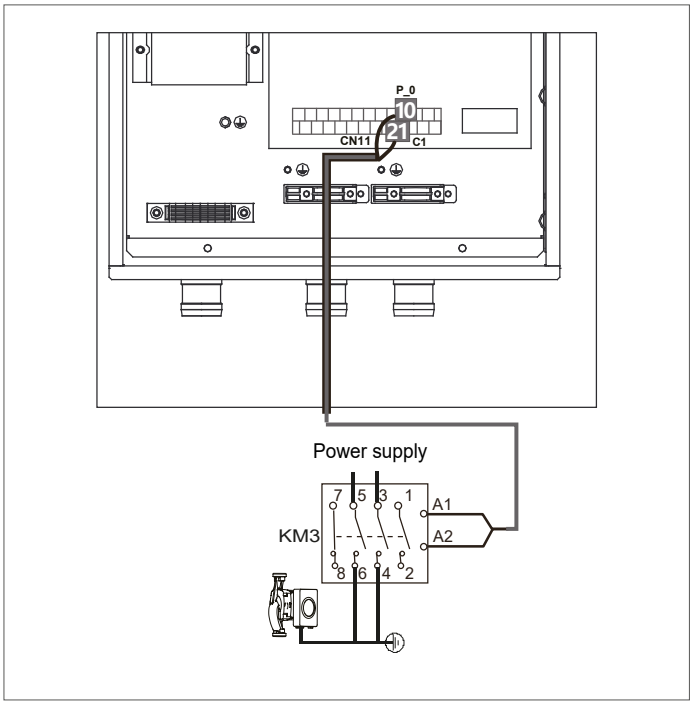

DHW pump P_d

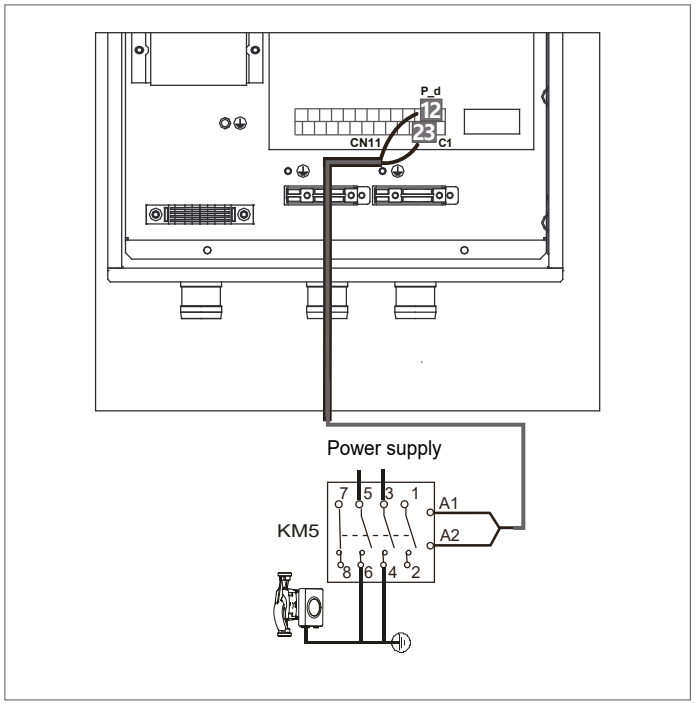

Contact type	220-240 VAC
Maximum tripping of protections (A)	0.2
Cable cross-section (mm^2)	0.75

8.4.3 Electric heaters

ⓘ For the parameter settings, see the installer keypad interface manual (MENU - 7 Other heat source)

Additional electric heater (IBH)

The unit can be supplied with the electric resistance integrated in the machine body or as an external accessory. If it is supplied as an external accessory, it is necessary to make the connection.

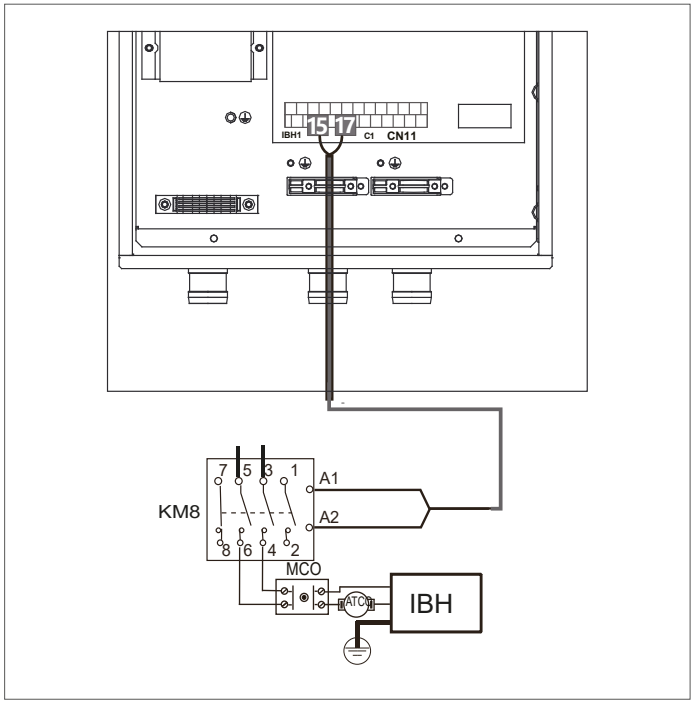

9kW resistance

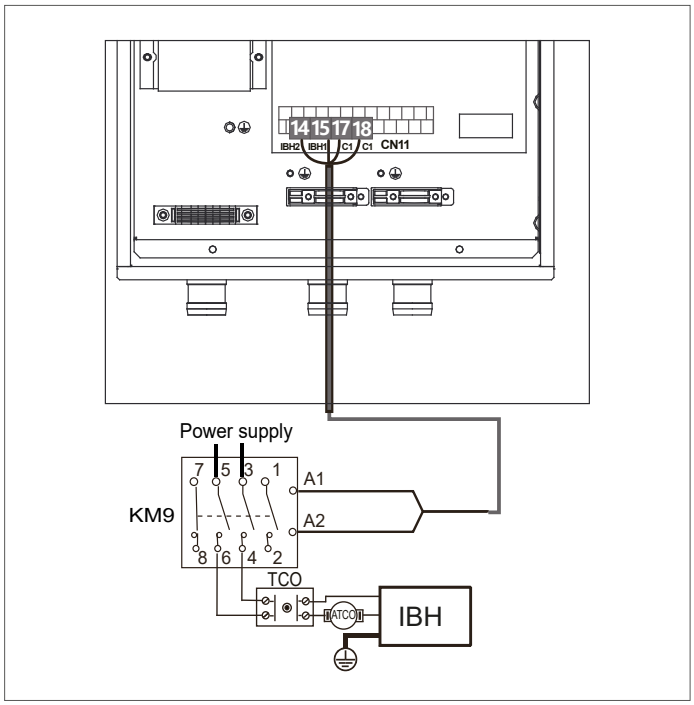

Contact type	220-240 VAC
Maximum tripping of protections (A)	0.2
Cable cross-section (mm^2)	0.75

Enabling resistance

Dip-switch	ON= 1 OFF=0		Factory Reset
S1	1	Reserved	1: OFF
	2	0= N.A. 1= External electric heater	2: ON
	3/4	0/0 = No IBH 0/1= Yes IBH	3: OFF 4: ON

Additional electric heater for DHW boiler (TBH)

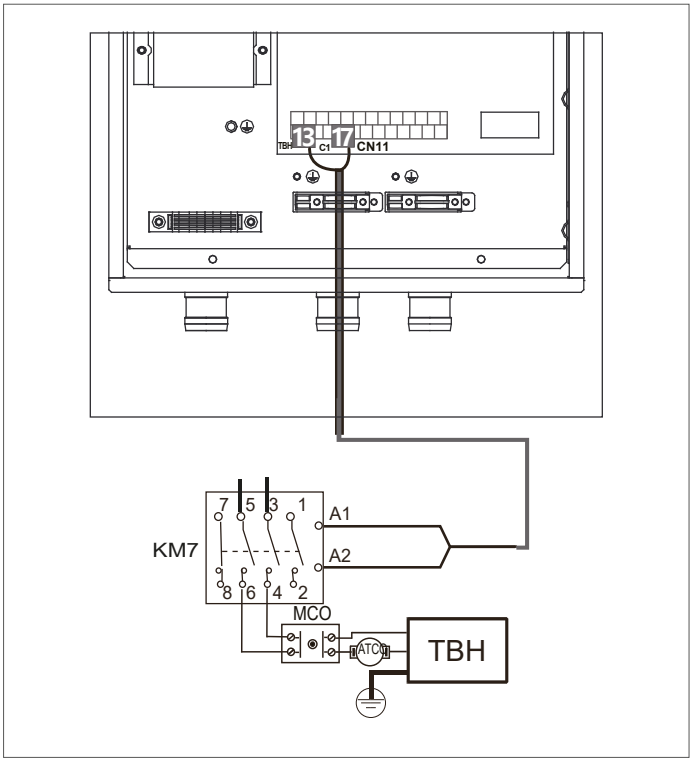

KM = contactor
MCO =Manual reset thermal protector
ATC = Auto reset thermal protector

Solar thermal signal control

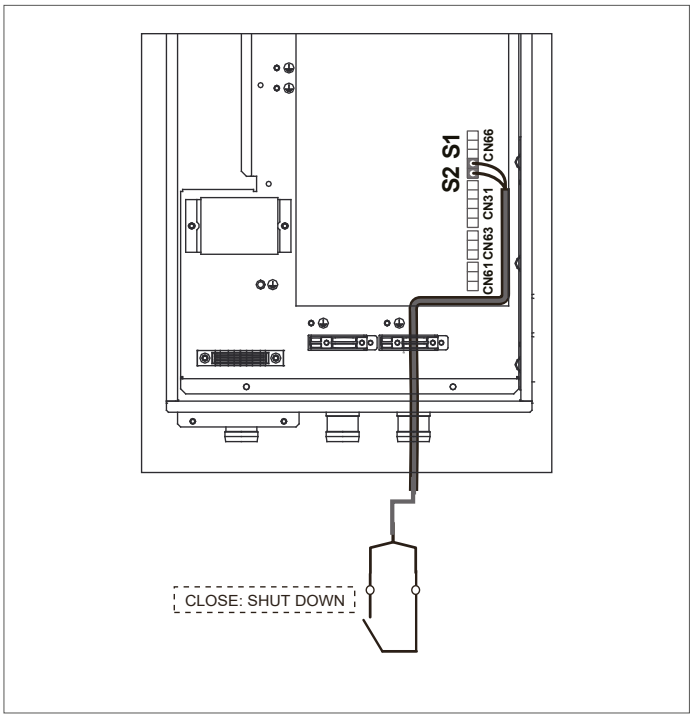

Integration heat generator

For units without electrical resistance, it is possible to connect an integration heat generator.

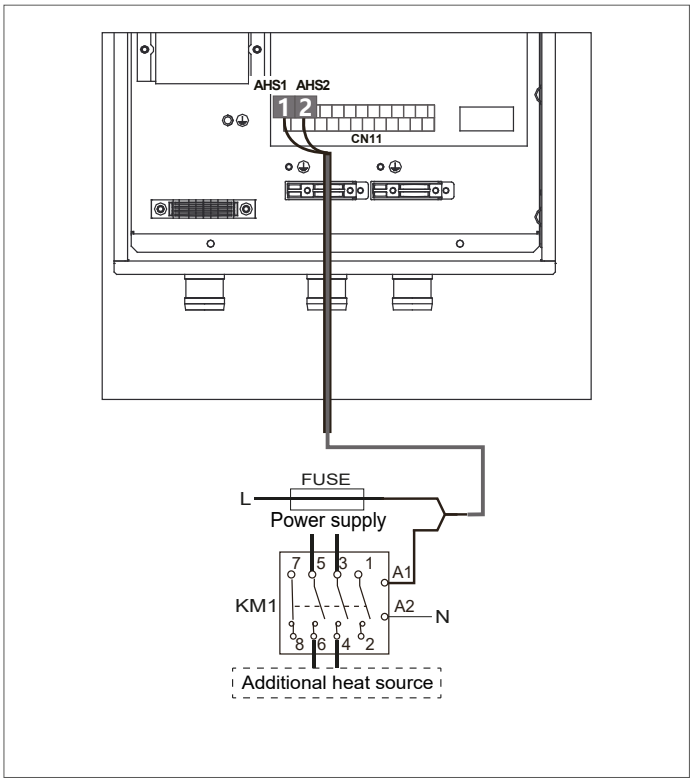

Contact type	220-240 VAC
Maximum tripping of protections (A)	0.2
Cable cross-section (mm²)	0.75

Defrosting state or alarm state P_x

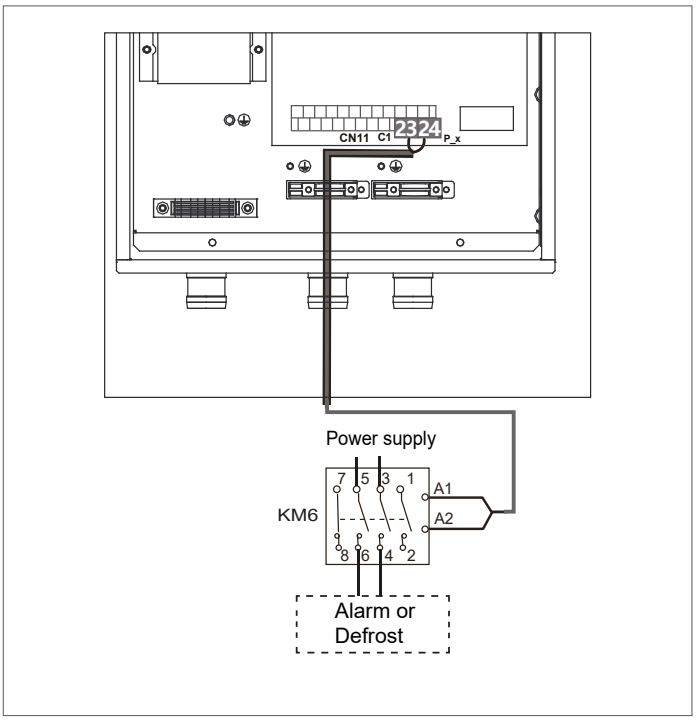

Contact type	220-240 VAC
Maximum tripping of protections (A)	0.2
Cable cross-section (mm²)	0.75

Remote ON - OFF

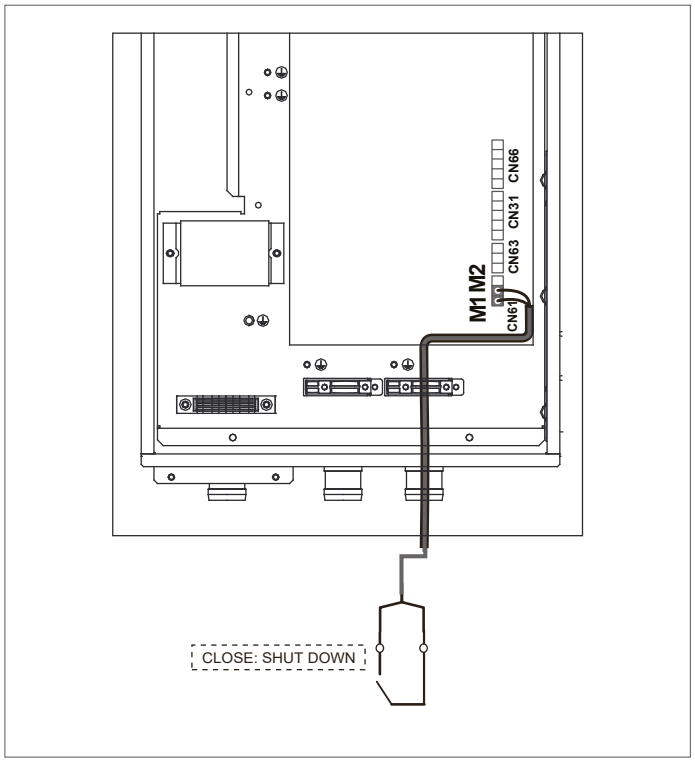

8.5 Zone thermostat

The zone thermostat (to be supplied separately: use the Manufacturer's accessory or equivalent) can be connected in three different ways. The choice of which one to use depends on the type of application.

ⓘ For parameter settings, see installer keyboard interface manual (menu - 6 Room thermostat setting)

Method A

One zone system with zone thermostat managing the unit's ON/OFF and mode change.

- Heating: closed contact K1 - K2
- Cooling: open contact K1 - K2
- ON: closed contact Z1 - COM
- OFF: open contact Z1 - COM

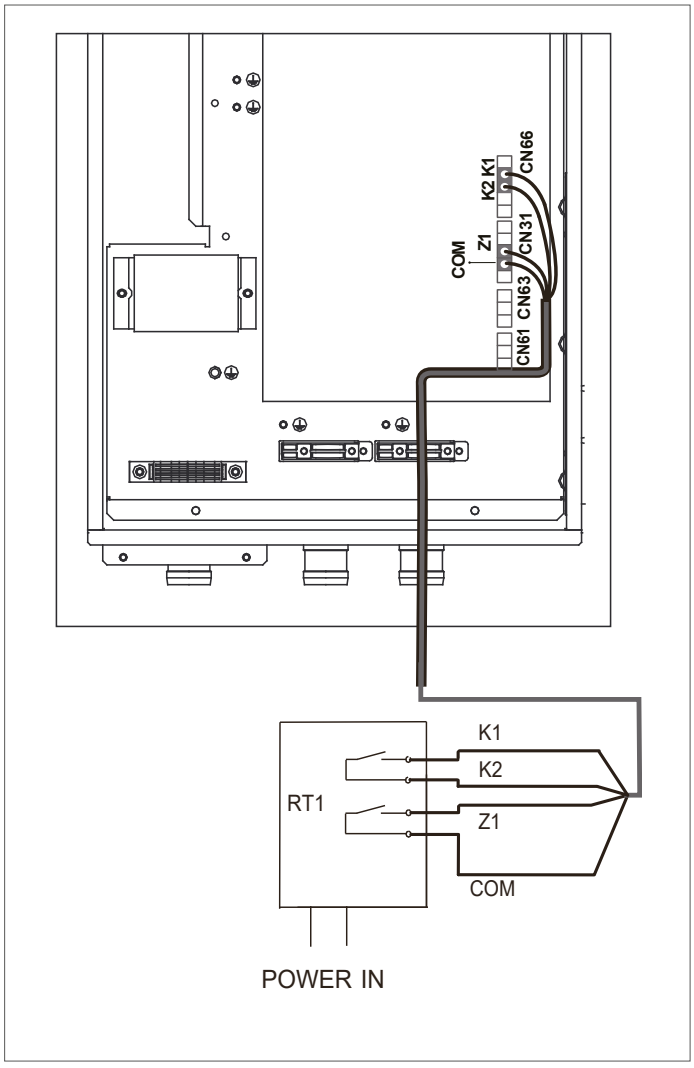

Method B

One zone system with zone thermostat managing only ON/OFF, user interface managing the unit's mode change.

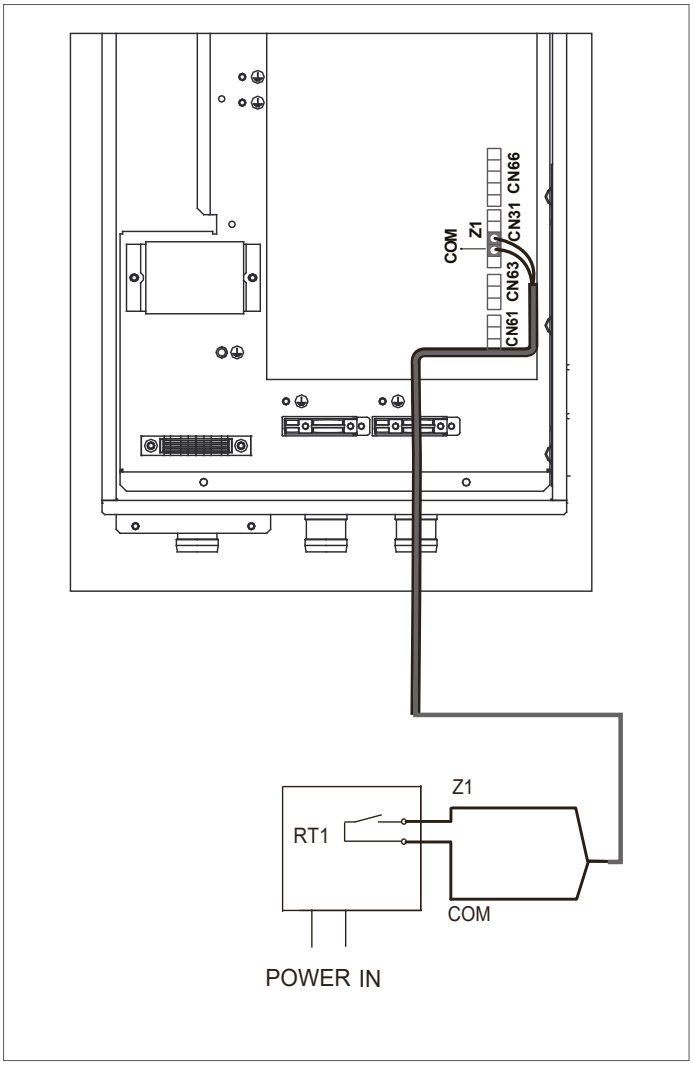

ⓘ In the presence of a zone thermostat, the HMI must be used to control the water supply temperature. It is not possible to select air temperature control using the HMI air probe.

Method C

Double zone system with two zone thermostats managing ON/OFF, user interface managing the unit's mode change.

The hydraulic module is connected with two external temperature controllers.

- Zone 1 On-Off from input Z1 - COM
- Zone 2 On-Off from input Z2 - COM
- Heat-Cool from user interface

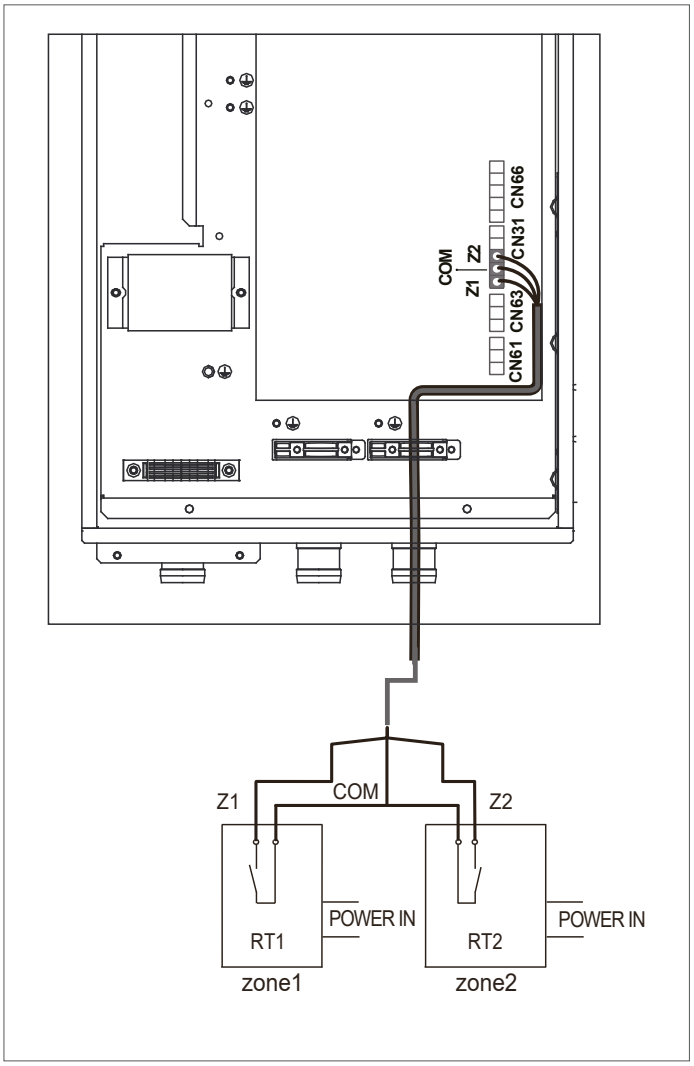

ⓘ The electrical connection of the thermostat should match the user interface settings. The power supply of the unit and that of the room thermostat must be connected to the same neutral line.

Method D

Two-zone system with two area thermostats managing ON/OFF and mode change, user interface managing change of unit water temperature setpoint.

The hydraulic module is connected with two external temperature controllers.

- Heating: closed contact K1 - K2
- Cooling: open contact K1 - K2
- On Area 1: closed contact Z1 - COM
- On Area 2: closed contact Z2 - COM
- Off Area 1: open contact Z1 - COM
- Off Area 2: open contact Z2 - COM

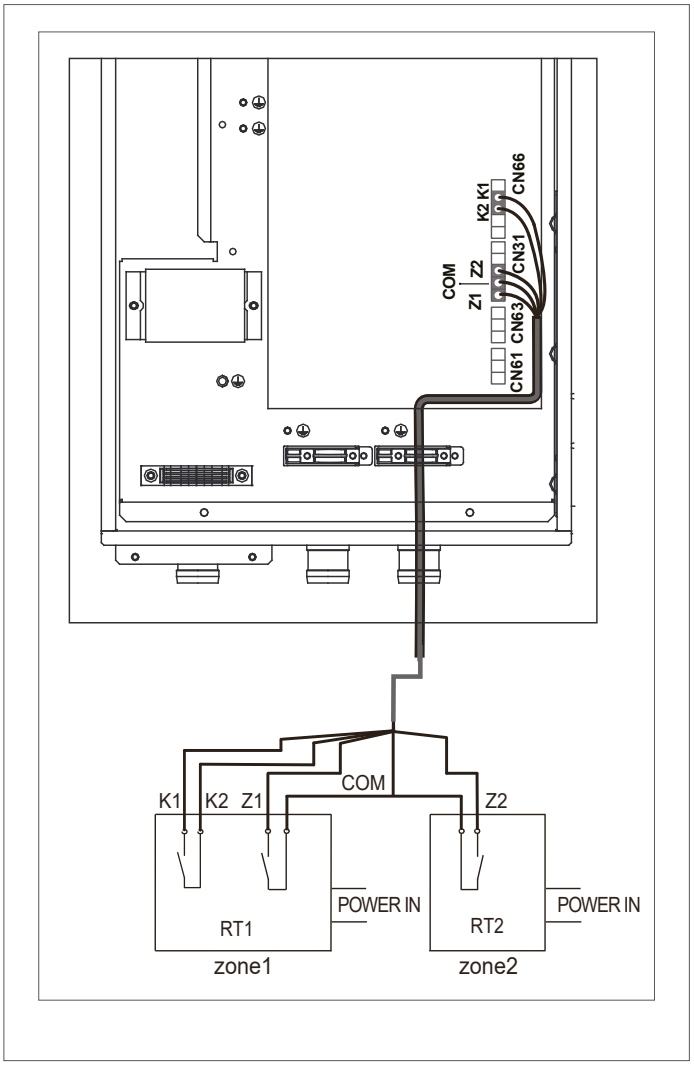

ⓘ The electrical connection of the thermostat should match the user interface settings. The power supply of the unit and that of the room thermostat must be connected to the same neutral line.

8.6 Exhaust pipe heating tape

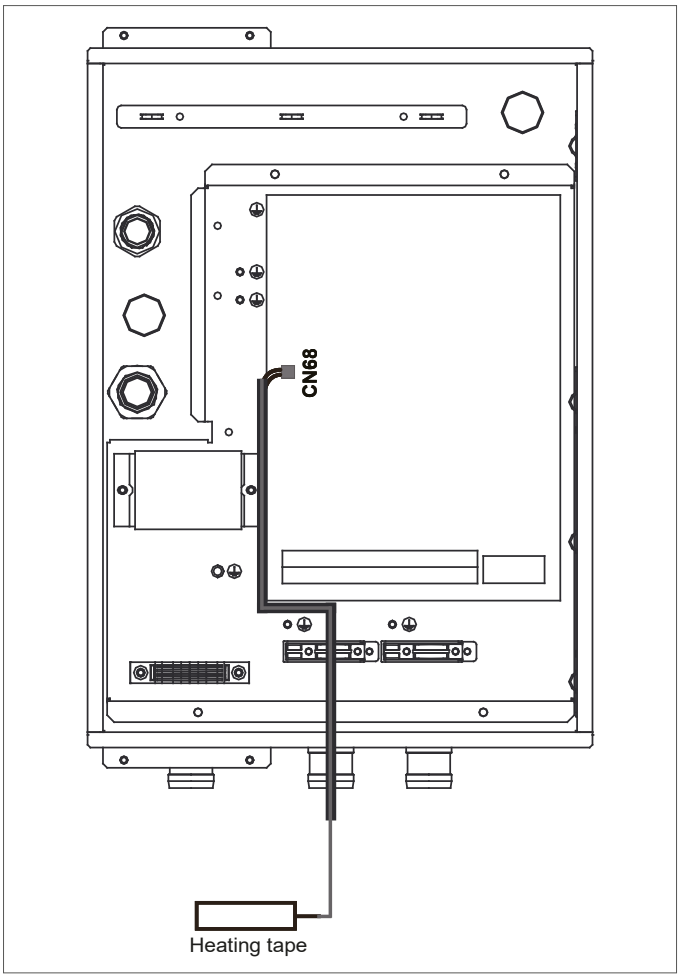

⚠ The maximum power is 100 W.

8.7 Simplified installation kit for unit

PEPG00003

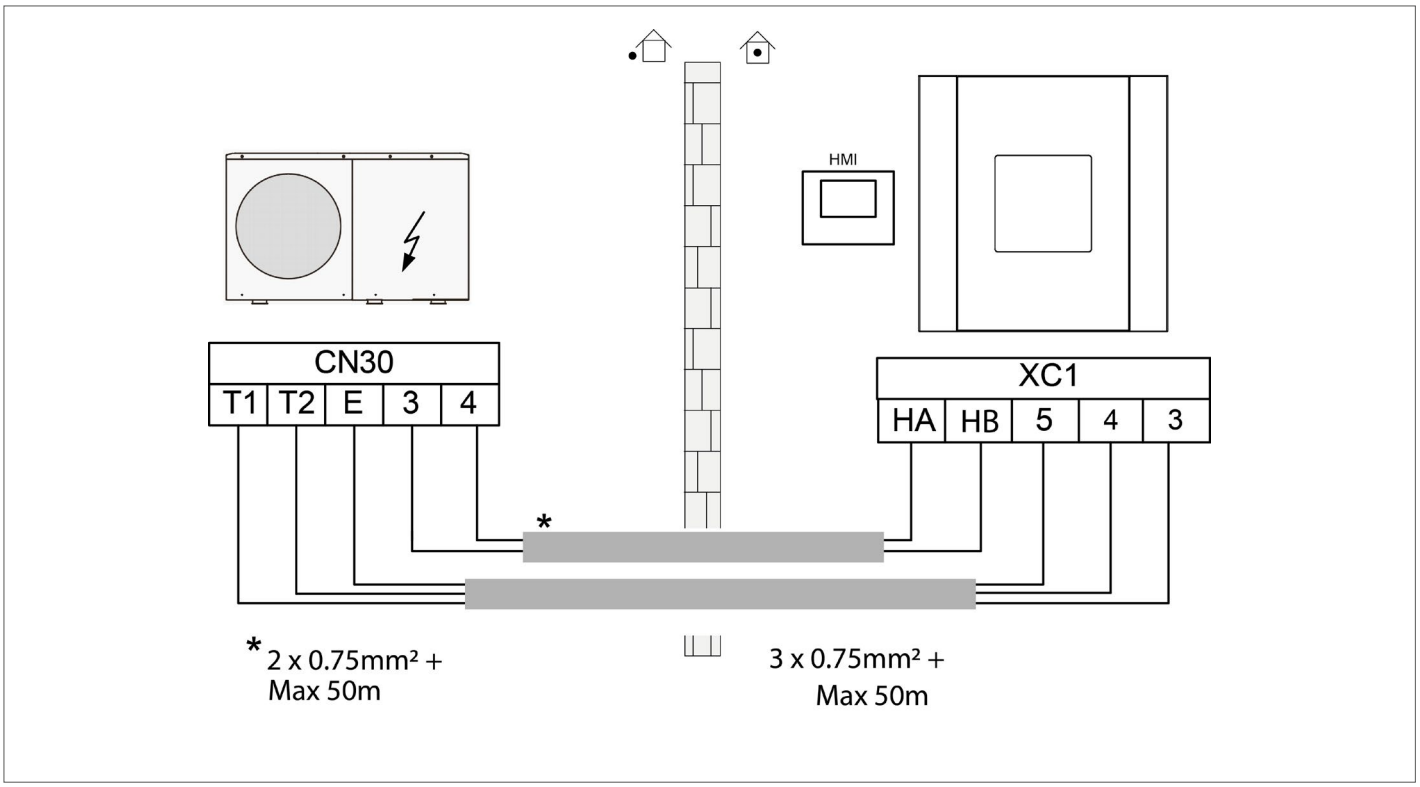

8.8 SMART GRID - Photovoltaic management

The smart grid system allows the excess electricity produced by the photovoltaic system or the electricity distribution network to be used to accumulate domestic hot water at lower or no cost.
The function can be used with enabled electricity distribution networks.

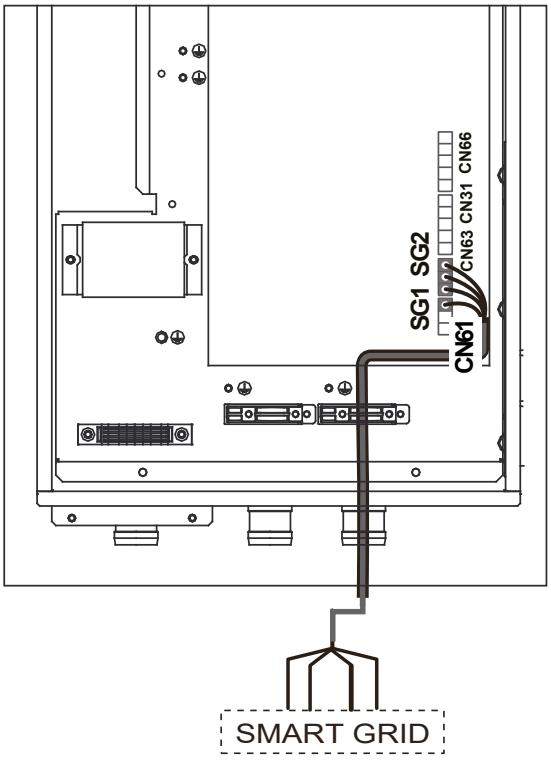

Energy cost	Contact		Available heaters	Operation	
	SG2	SG1		System	DHW
Free	ON	OFF	-	Standard	No request for Heating / Cooling: forced operation in DHW mode with set point T5S = Max value °C
			IBH		
			TBH		Forced domestic hot water operation with T5S set point = Max value °C. TBH is forcibly started until the domestic hot water set point is reached. If necessary, the Heat Pump can work simultaneously on the Heating/Cooling system.
			IBH + TBH*		
Standard	OFF	OFF	any	Standard	Standard
Expensive	OFF	ON	-	Forced OFF	Forced OFF**
			IBH / TBH		
Expensive	ON	ON	-	Forced OFF	Forced OFF**
			IBH / TBH		

* when IBH and TBH are enabled together, IBH can only be used for system heating.
** DISINFECT, FAST DHW, STORAGE TANK and other domestic hot water-related functions do not work.
The frost protection and defrosting operate smoothly in all conditions.
if AHS is available, it can operate for Heating, Cooling or DHW in any of these conditions.

9. Starting up the system

⚠ This section is intended only for the Technical Support Service.

⚠ Follow the safety instructions in the "About R-290 refrigerant" chapter.

⚠ The electrical and hydraulic connections and other works typical of the system are the responsibility of the Installer.

⚠ Operate in compliance with safety regulations in force.

⚠ Upon request, the service centres performing the start-up.

⚠ Agree upon in advance the star-up data with the service centre.

⚠ When installing or servicing, never leave the unit unattended after removing the service panels.

⚠ **Check that:**

- the unit should be installed properly and in conformity with this manual
- the electrical power supply line should be isolated at the beginning
- the unit isolator is open, locked and equipped with the suitable warning
- make sure no voltage is present

Remember that:

- during installation, unit settings and parameters should be configured by the Installer according to the installation configuration, climatic conditions, and end-user preferences
- related settings are accessible and programmable through the user interface

ⓘ Refer to the user interface manual for operation.

9.1 Preliminary checks

ⓘ For details refer to the different manual sections.

9.1.3.1 Unit power supply: OFF

1	Clearances: • check that distances are respected
2	Water characteristics: • check that the allowable water values are respected
3	Water filter: • check that it is correctly installed at the entrance to the aqueduct
4	Water line input: • check the correct connection of the water outlet and water inlet
5	Non-return valve: • check that the non-return valve on the DHW recirculation is present
6	DHW expansion vessel: • check that the expansion tank is present
7	System: • check that it is loaded, • check the system pressure • check that it has been vented
8	On-site wiring: • check all wiring connections adhere to the instructions in this manual
9	Fuses, circuit breakers or protection devices: • check the size and type according to the instructions given in this manual • ensure that no fuses or protective devices have been bypassed
10	Automatic switch of integrative electric heater: • check the circuit breaker of the supplementary electric heater in the electrical cabinet is closed (varies according to the type of supplementary electric heater). Refer to the wiring diagram
11	Automatic switch of supplementary electric heater for DHW cylinder: • check the circuit breaker of the supplementary electric resistance for DHW tank is closed (applicable only to units with optional domestic hot water tank)
12	Internal wiring: • check that the wiring and connections inside the electrical cabinet are tight and in good condition • check that the grounding wiring is perfectly tightened and in good condition
13	Assembly: • check that hydraulic connections are properly tightened to avoid water leaks, abnormal noises and vibrations when starting the unit
14	Damaged components: • check the components and circuitry inside the unit for damage or deformation
15	Refrigerant leak: • check the inside of the unit for refrigerant leakage • if there is a refrigerant leakage, refer to the "About R-290 refrigerant" chapter

16	Power supply voltage: • check that the voltage of the power supply is within the values on the unit's serial label
17	Automatic air vent valve: • Check that the automatic air vent valve is open (at least 2 turns)
18	Shut-off valve: • check that the shut-off valve is fully open
19	Structure: • check all the structure of the unit is mounted correctly
20	Unit condensate: • check that it is disposed of correctly • check that it does not freeze in winter

9.2 SYSTEM CONFIGURATION

ⓘ For system configuration, of advanced features, refer to the user interface manual.

10. **Start-up**

Preliminary warnings

ⓘ For system configuration, of advanced features, refer to the user interface manual.

⚠ When the unit is turned on, nothing is displayed on the user interface.

⚠ Check the following anomalies before diagnosing possible error codes:

- electrical connection problem (power supply or communication signal)
- fuse failure on main electronic board

⚠ Error code "E8" or "E0" is displayed on the user interface:

- there is air in the system
- water pressure in the system is insufficient
- the water flow rate in the system is insufficient

⚠ Before starting the test run, make sure that the water system and the storage tank are full of water and that the air has been vented. Otherwise the system components could suffer irreversible damage.

⚠ Error code "E2" is displayed on the user interface:

- check the wiring between the user interface and the unit

⚠ Initial start-up at low outside temperature:

- for the initial start-up when the outside temperature is low, the water should be heated gradually
- use the underfloor preheating function

ⓘ Refer to the user interface manual for operation.

⚠ For radiant panel systems

⚠ If the temperature rises abruptly in a short time, the floor could suffer irreversible damage.

During start-up, the following checks must be carried out:

1 Function test of actuators
2 Air vent
3 Test of operating modes
4 Minimum water flow control in all conditions

10.1 **Opening the "For serviceman" menu**

To access:

► press ☰ + 〉 for 3 seconds
► enter the password and confirm

ⓘ To find out the password, refer to the service manual or contact the manufacturer.

After modifications:

► press ☰
○ the confirmation page is displayed
► select YES

10.2 **Function test of actuators**

Verify proper operation of the actuators.

⚠ During the operation test of the actuators, the unit protection function is disabled.

⚠ Excessive use of the test can damage the components.

List of actuators

Parameter	Description
AHS	Backup boiler
IBH	Backup electric heater
P_i	Unit pump or Zone 1 pump (for double zone systems)
P_o	Secondary circuit pump (or Zone 1 pump for double zone systems)
P_c	Zone 2 pump (for double zone systems)
P_d	DHW recirculation pump
P_s	Solar circuit pump
SV1	3-way circuit/DHW diverter valve
SV2	3-way diverter valve for direct double zone systems
SV3	3-way mixing valve for mixed circuit

Parameter	Description
TBH	Backup electric heater for DHW (Domestic Hot Water) storage tank

To verify the actuators:

► access the "For serviceman" menu
► select “Test run”
► press OK
► select “Check point”
► press OK
► select the Actuator to be verified
► press OK to activate the actuator
○ the state of the actuator becomes ON
► press OK to deactivate the actuator
○ the state of the actuator becomes OFF

⚠ When exiting the function, the actuators are automatically set to OFF.

10.3 Air vent

Activates the vent cycle that removes air in the hydraulic circuit that can cause unit malfunction.

To activate the vent cycle:

► access the "For serviceman" menu
► select “Test run”
► press OK
► select “Air vent”
► press OK
► press OK to activate
○ the indicator becomes
► press OK to deactivate
○ the indicator becomes

10.4 Test of operating modes

Verify the correct operation of:

- circulation pump
- cooling mode
- heating mode
- DHW mode

To verify:

► access the "For serviceman" menu
► press OK
► select “Test run”
► press OK
► select the operation mode
► press OK
► the test starts

10.5 Checking the minimum flow-rate

ⓘ For system configuration, of advanced features, refer to the user interface manual.

To verify that the flow rate is always guaranteed in different situations, proceed as follows.

To perform the test:

► open all valves
► perform the circulation pump test
○ read the flow rate
► change the settings of the bypass valve until the set value reaches the minimum required flow rate + 2 l/ min
► section off an area
► perform the circulation pump test
○ read the flow rate
► change the bypass valve settings until the set value reaches the minimum required flow rate + 2 l/min
► repeat for all the zones present

10.6 Start-up report

Identifying the operating objective conditions is useful to control the unit over time.
With the unit at steady state, i.e. in stable and close to working conditions, collect the following data:

- total voltages and absorptions with unit at full load
- absorptions of the different electric loads (compressors, fans, pumps etc)
- temperatures and flows of the different fluids (water, air) both in input and in output from the unit
- temperature and pressures on the characteristic points of the refrigerating circuit (compressor discharge, liquid, intake)

The measurements must be kept and made available during maintenance interventions.

10.7 2014/68/UE PED directive

DIRECTIVE 2014/68/UE PED gives instructions for installers, users and maintenance technicians as well.
Refer to local implementing regulations; briefly and for information only.
Compulsory verification of the first installation:

- only for units assembled on the installer's building site (for ex. Condensing circuit + direct expansion unit)
- Certification of setting in service:
- for all the units

Periodical verifications:

- to be executed with the frequency indicated by the Manufacturer (see the "maintenance inspections" paragraph)

11. **Maintenance**

11.1 **Prerequisites**

⚠ This section is intended only for the Technical Support Service.

⚠ Follow the safety instructions in the "About R-290 refrigerant" chapter.

⚠ All operations must be carried out by personnel who meet the requirements of current regulations and are trained in the risks related to such operations.

⚠ Operate in compliance with safety regulations in force.

The maintenance allows to:

- maintaining the unit efficient
- reduce the deterioration speed all the equipment is subject to over time
- collect information and data to understand the efficiency state of the unit and prevent possible faults

⚠ **Check that:**

- the electrical power supply line should be isolated at the beginning
- the unit isolator is open, locked and equipped with the suitable warning
- make sure no voltage is present

⚠ After turning off the power, wait at least 5 minutes before accessing to the electrical panel or any other electrical component.

⚠ Before accessing check with a multimeter that there are no residual voltage.

⚠ When installing or servicing, never leave the unit unattended after removing the service panels.

11.2 Maintenance check list

Intervention frequency (months)		1	6	12
1	presence of corrosions			X
2	panel fixing			X
3	fan fixing		X	
4	coil cleaning		X	
5	water filter cleaning		X	
6	hydraulic system filling pressure		X	
7	water: quality, pH, glycol concentration		X	
8	air in the piping			X
9	circulation pump			X
10	check of the fixing and the insulation of the power lead			X
11	check of the earthing cable			X
12	electric panel cleaning			X
13	power remote controls status			X
14	clamp closure, cable isolation integrity			X
15	voltage and phase unbalancing (no load and on-load)			X
16	absorptions of the single electrical loads		X	
17	compressor casing heaters test		X	
18	leak control *		X	
19	cooling circuit work parameter detection			X
20	water side pressure relief valve		X	
21	gas side pressure relief valve *			X
22	protective device test: pressure switches, thermostats, flow switches etc..			X
23	control device test: alarm signal, thermometers, probes, pressure gauges, etc.		X	
24	check schedulers, setpoints, compensations, etc.		X	
25	fill in the unit's booklet			

ⓘ *Refer to the local regulations. Companies and technicians that carry out installation, maintenance/ fixing, leak control and recovery interventions must be CERTIFIED as required by local regulations.

11.3 Unit booklet

It's advisable to create a unit booklet to take notes of the unit interventions.
In this way it will be easier to adequately note the various interventions and aid any troubleshooting.

Report on the booklet:

- date
- intervention description
- carried out measures etc.

11.4 Standby mode

In case of a long period of inactivity:

► turn off the power
► avoid the risk of frost (use glycol or empty the system)

11.5 Emptying the system

The units are not fitted with a drain valve, so one must be provided on a pipe connecting to the system near to the device and below it.

⚠ All operations must be carried out with the unit shut down and disconnected from the mains power supply.

Before emptying:

- check that the system water filling/refilling valve is closed

To drain the system:

- open the drain valve on the outside of the device

► open all of the system and terminal relief valves

11.6 Cleanliness of the structure

To clean:

► wash at least once or twice a year depending on exposure (pollution, salt deposits, dirt)
► clean with neutral detergent and cold or warm water (max 30°C).

⚠ Do not use solvents or acid, alkaline, abrasive products.

⚠ Check the condition of the parts making up the structure.

⚠ Paint so as to eliminate or reduce oxidation at the points in the unit where this problem may occur

⚠ Check the fastening of the external paneling of the unit. Poor fastening may give rise to malfunctions and abnormal noise and vibration,

11.7 Air side exchanger

The coil must allow maximum thermal exchange, therefore, the surface must be clear from dirt and scaling.

ⓘ Clean at least every three months.

⚠ The cleaning frequency must be increased according to the build-up of dirt/dust and the environment (e.g. coastal areas with chlorides and salts or industrial areas with aggressive substances).

⛔ Do not use means to accelerate the defrosting process or to clean, other than those recommended by the manufacturer.

To clean:

► use a soft brush or aspirator or pressurised air jet or high-pressure water jet machine
► clean the air inlet side
► keep the direction parallel to the flow of the flaps to avoid damages

⚠ Check that the aluminium fins are not bent or damaged, in the event of damages contact the authorised service centre which will "comb" the coil to restore optimal air flow

⚠ Accidental contact with the exchanger flaps can cause injuries from cut: use protective gloves.

11.8 Water pressure

► check that the water pressure is greater than 1 bar

If necessary:

► add water up to 1.5-1.8 bar

11.9 Water filter

► check and clean the water filter

In case of obstruction:

► clean the filter

11.10 Degasser / Deaerator

Check that:

- there are no impurities preventing the correct passage of water
- the air purge is effective

11.11 Water side pressure relief valve

► check the safety valve for leakage
► check that the pressure relief valve pipe is correctly positioned for draining the water
► check that the safety valve pipe is free from obstruction

11.12 Unit electrical panel

► visually inspect the electrical panel
► check the tightness of the connections
► check the cleanliness of the electrical panel

11.13 Using glycol

At least once a year

► check the glycol concentration and pH value of the system

A pH value below 8.0:

► indicates that a significant proportion of the inhibitor has been consumed
► topping up

A pH value of less than 7.0:

► indicates that the glycol has oxidised
► drain and flush the system thoroughly to prevent serious damage

⚠ The glycol solution must be disposed of in accordance with the local laws and regulations in force.

11.14 refrigerant side pressure relief valve

The safety valve must be replaced:

► if it has opened
► if it shows oxidation
► according to the date of manufacture, in accordance with local regulations.

To replace the valve:

► charge the unit
► unscrew and remove the safety valve

⛔ DO NOT HEAT THE COMPONENT

► clean the connection base
► install the new valve on the tapped hole
► apply white paste
► apply a tightening torque of 26 Nm
► make a tightness test
► recharge the unit

12. **Decommissioning**

12.1 **Disconnection**

⚠ Before performing any work, carefully read: SAFETY WARNINGS FOR OPERATIONS ON UNITS CONTAINING R-290

⚠ Avoid leak or spills into the environment.

⚠ Before disconnecting the unit, the following must be recovered, if present:

- refrigerant gas
- Anti-freeze solutions in the hydraulic circuit

⚠ Awaiting decommissioning and disposal, the unit can also be stored outdoors, as bad weather and rapid changes in temperature do not harm the environment provided that the electric, cooling and hydraulic circuits of the unit are intact and closed.

12.2 **WEEE INFORMATION**

The manufacturer is registered on the EEE National Register, in compliance with implementation of Directive 2012/19/EU and relevant national regulations on waste electrical and electronic equipment.
This Directive requires electrical and electronic equipment to be disposed of properly.
Equipment bearing the crossed-out wheelie bin mark must be disposed of separately at the end of its life cycle to prevent damage to human health and to the environment.
Electrical and electronic equipment must be disposed of together with all of its parts.
To dispose of “household” electrical and electronic equipment, the manufacturer recommends you contact an authorised dealer or an authorised ecological area.
“Professional” electrical and electronic equipment must be disposed of by authorised personnel through established waste disposal authorities around the country.
In this regard, here is the definition of household WEEE and professional WEEE:
WEEE from private households: WEEE originating from private households and WEEE which comes from commercial, industrial, institutional and other sources which, because of its nature and quantity, is similar to that from private households. Subject to the nature and quantity, where the waste from EEE was likely to have been by both a private household and users of other than private households, it will be classed as private household WEEE;
Professional WEEE: all WEEE which comes from users other than private households.
This equipment may contain:

- refrigerant gas, the entire contents of which must be recovered in suitable containers by specialised personnel with the necessary qualifications;
- lubrication oil contained in compressors and in the cooling circuit to be collected;
- mixtures with antifreeze in the water circuit, the contents of which are to be collected;
- mechanical and electrical parts to be separated and disposed of as authorised.

When machine components to be replaced for maintenance purposes are removed or when the entire unit reaches the end of its life and needs to be removed from the installation, waste should be separated by its nature and disposed of by authorised personnel at existing collection centres.



12.3 **WEEE Disposal Procedure (Italian Market)**

12.4 **WEEE Disposal Procedure (German Market)**

12.5 **WEEE Disposal Procedure (Croatian Market)**

13. **Residual risks**

13.1 General

In this section the most common situations are indicated,as these cannot be controlled by the manufacturer and could be a source of risk situations for people or things.

13.2 Danger zone

- This is an area in which only an authorised operator may work.
- The danger zone is the area inside the unit which is accessible only with the deliberate removal of protections or parts thereof.

13.3 Handling

- The handling operations, if implemented without all of the protection necesssary and without due caution, may cause the drop or the tipping of the unit with the consequent damage, even serious, to persons, things or the unit itself.
- Handle the unit following the instructions provided in the present manual regarding the packaging and in compliance with the local regulations in force.
- Should the refrigerant leak please refer to the refrigerant “Safety sheet”.

13.4 Installation

Remember that:

- incorrect installation of the unit can lead to water leaks, condensate accumulation, refrigerant leakage, electric shock, fire, malfunction or damage to the unit itself
- installation of the unit in a place where even infrequent flammable gas leaks are possible and the accumulation of these gases in the area around the unit can cause explosions and fires
- installation of the unit in a place that is not suitable to support its weight and/or provide adequate anchorage may cause it to fall and/or tip over, resulting in damage to property, people or the unit itself

⚠ **Check:**

- the location of the unit carefully
- that the installation is only carried out by qualified technical personnel and the instructions in this manual and current local regulations are followed
- the location of the unit carefully

⚠ Easy access to the unit by children, unauthorised persons or animals may be the source of accidents, some serious.

⚠ Install the unit in areas which are only accessible to authorised person and/or provide protection against intrusion into the danger zone.

13.4.1 General risks

⚠ Smell of burning, smoke or other signals of serious anomalies may indicate a situation which could cause damage to people, things or the unit itself.

In this case:

- electrically disconnect the unit
- contact the authorised service centre to identify and solve the problem causing the anomaly

⚠ Accidental contact with exchange batteries, compressors, air delivery tubes or other components may cause injuries and/or burns.

⚠ Always wear suitable clothing including protective gloves to work inside the danger zone.

⚠ Maintenance and repair operations carried out by non-qualified personnel may cause damage to persons, things or the unit itself.

⚠ Always contact a qualified assistance centre

⚠ Failure to close the unit panels, or to check that all panel fixing screws are properly tightened, can result in damage to property, people or the unit itself

⚠ Periodically check that all the panels are correctly closed and fixed

⚠ If there is a fire the temperature of the refrigerant could reach values that increase the pressure to beyond the safety valve with the consequent possible projection of the refrigerant itself or explosion of the circuit parts that remain isolated by the closure of the tap.

⚠ Do not remain in the vicinity of the safety valve and never leave the refrigerating system taps closed.

13.4.2 **Electric parts**

⚠ An incomplete attachment line to the electric network or with incorrectly sized cables and/or unsuitable protective devices can cause electric shocks, intoxication, damage to the unit or fires.

⚠ Carry out all of the work on the electric system referring to the electric layout and the present manual ensuring the use of a system thereto dedicated.

⚠ An incorrect fixing of the electric components cover may lead to the entry of dust, water etc inside and may consequently electric shocks, damage to the unit or fires.

⚠ Always fix the unit cover properly.

⚠ When the metallic mass of the unit is under voltage and is not correctly connected to the earthing system it may be a source of electric shock and electrocution.

⚠ Always pay particular attention to the implementation of the earthing system connections.

⚠ Contact with parts under voltage accessible inside the unit after the removal of the guards can cause electric shocks, burns and electrocution.

⚠ Open and padlock the general isolator prior to removing the guards and signal work in progress with the appropriate sign.

⚠ Contact with parts that could be under voltage due to the start up of the unit may cause electric shocks, burns and electrocution.

⚠ When voltage is unnecessary for the circuit open the isolator on the attachment line of the unit itself, padlock it and display the appropriate warning sign.

13.4.3 **Moving parts**

⚠ Contact with the transmissions or with the fan aspiration can cause injuries.

Remember that:

- before accessing inside the unit, open the disconnector switch on the unit connection line, padlock it and display the appropriate warning sign
- contact with fans can cause injury.
- before removing the protection grills or fans, open the disconnector switch on the unit connection line, padlock it and display the appropriate warning sign.

13.5 Refrigerant

⚠ The intervention of the safety valve and the consequent expulsion of the gas refrigerant may cause injuries and intoxication.

⚠ Always wear suitable clothing including protective gloves and eyeglasses for operations inside the danger zone.

⚠ Should the refrigerant leak please refer to the refrigerant “Safety sheet”.

⚠ Contact between open flames or heat sources with the refrigerant or the heating of the gas circuit under pressure (e.g. during welding operations) may cause explosions or fires.

⚠ Do not place any heat source inside the danger zone.

⚠ The maintenance or repair interventions which include welding must be carried out with the system off.

13.6 Hydraulic parts

⚠ Defects in tubing, the attachments or the removal parts may cause a leak or water projection with the consequent damages to people, things or shortcircuit the unit.

14. Advanced applications

14.1 Units connected in cascade

The cascade function of the system supports a maximum of 6 units, one Master and five Slaves.

14.1.1 Water connections

The hydraulic connection should preferably be an inverted return connection for better water balance between the different units.
It is also mandatory to install non return valves in parallel units to stop the flow through the unit from short circuiting when the circulator is not in operation.

14.1.2 Electrical connections

Use shielded wire in M/S cascade connections.
To ensure auto-addressing, all units must be connected to the same power supply and evenly powered.

14.1.3 Configuration

The configuration is carried out by setting the SW9, S3 and S2 dip-switches.
SW9: defines the Master unit.
(Only one unit needs to be configured as Master.)
S3: sets the address of the Slave units.
Each unit on the network must be assigned an address.

S3	1,2,3	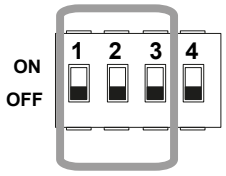

0/0/0 = address 0 (master unit)
1/0/0 = address 1
0/1/0 = address 2
0/0/1= address 3
1/1/0 = address 4
1/0/1 = address 5
0/1/1 = address 6 (Reserved)
1/1/1 = address 7 (Reserved)

All units can produce domestic hot water provided that the following conditions are met:

- correct hydraulic connection with SV1 diverter valve
- S2-2 dipswitch setting to ON

S2	2	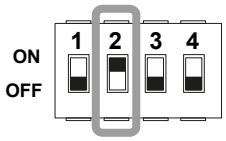

When dipswitches SW9, S3 and S2 are correctly set, the Master will automatically recognise the number of connected Slave units and how many of them can produce domestic hot water.

Alarms displayed on the units:

- MASTER refers to the MASTER
- SLAVE refers to the SLAVE

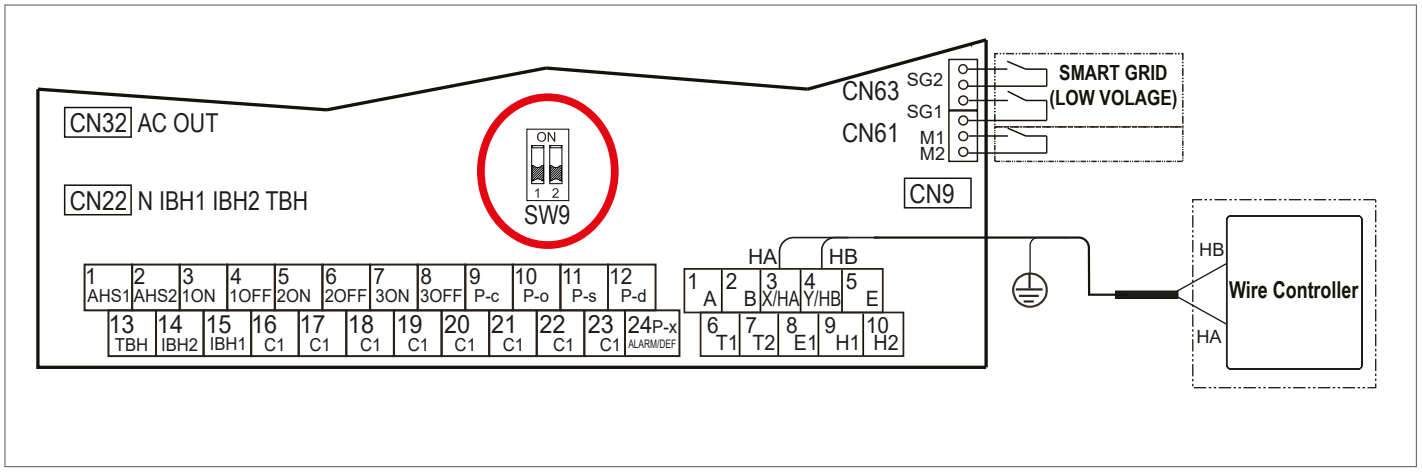

Connection diagram of the electrical control system for the cascade system

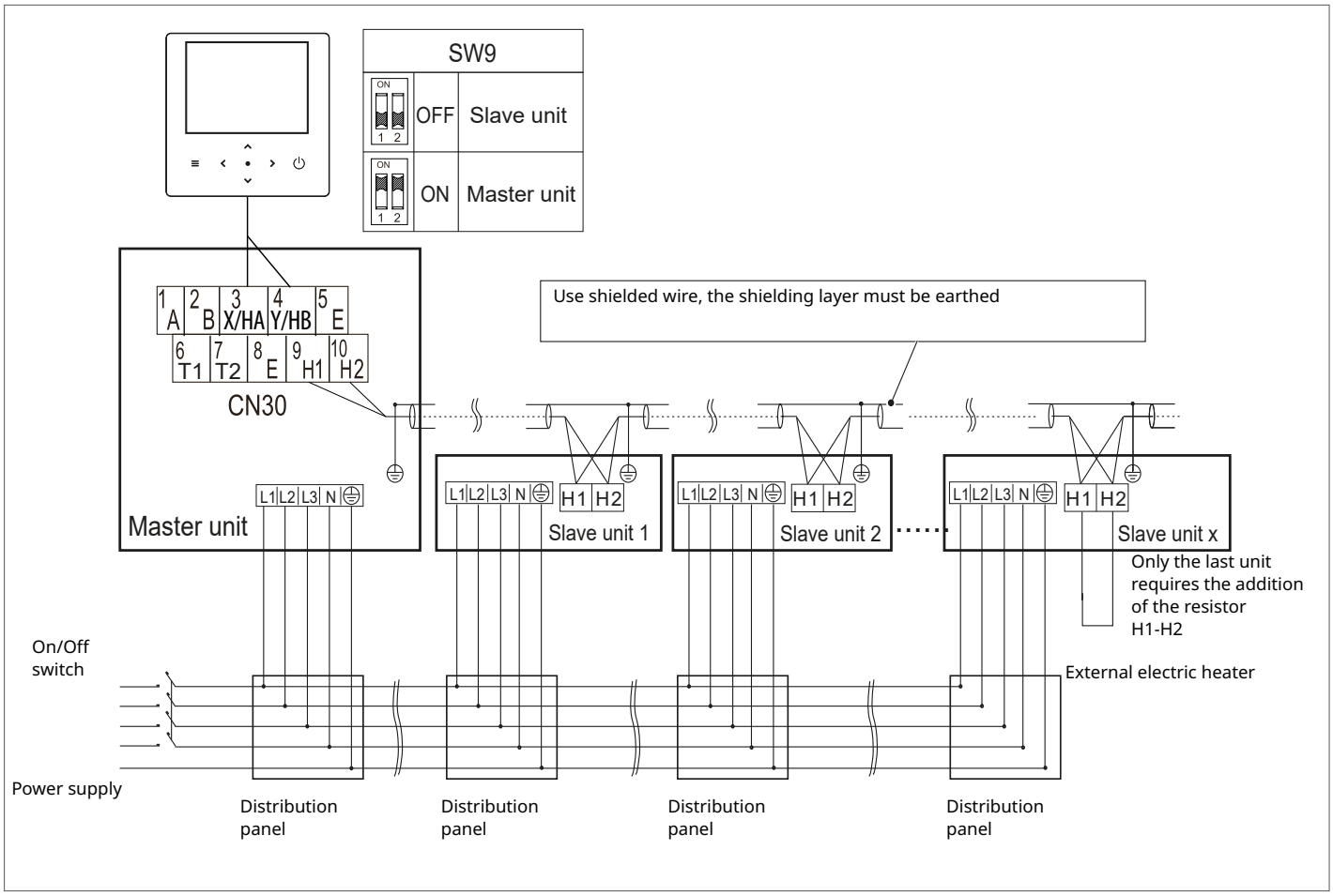

15. **Technical data**

Heating

Size			2.1	3.1	4.1 / 4.1T	5.1 /5.1T	6.1 / 6.1T	7.1 / 7.1T	8.1 / 8.1T
Air 7°C - Water 35°C									
Rated heating capacity	1	kW	4,1	6,1	8,0	9,5	12,1	14,0	15,5
Total power input	1	kW	0,77	1,21	1,52	1,92	2,44	2,98	3,44
COP	1	-	5,30	5,03	5,25	4,95	4,95	4,70	4,50
Water flow-rate	1	l/s	0,2	0,3	0,4	0,5	0,6	0,7	0,7
Nominal available pressure	1	kPa	56	56	51	51	45	42	38
Maximum available pressure	1	kPa	86	86	85	79	64	53	45
Air 2°C - Water 35°C									
Rated heating capacity	2	kW	4,0	5,6	7,1	8,2	9,2	11,0	13,0
Total power input	2	kW	0,95	1,40	1,73	2,10	2,30	2,89	3,60
COP	2	-	4,23	4,00	4,10	3,90	4,00	3,80	3,61
Water flow-rate	2	l/s	0,2	0,3	0,3	0,4	0,4	0,5	0,6
Nominal available pressure	2	kPa	56	56	51	51	45	42	38
Nominal available pressure	2	kPa	86	86	87	85	80	70	58
Air -7°C - Water 35°C									
Rated heating capacity	3	kW	4,1	6,0	7,0	8,0	10,0	12,0	13,1
Total power input	3	kW	1,26	1,98	2,15	2,54	3,17	4,29	4,85
COP	3	-	3,25	3,03	3,25	3,15	3,15	2,80	2,70
Water flow-rate	3	l/s	0,2	0,3	0,3	0,4	0,5	0,6	0,6
Nominal available pressure	3	kPa	56	56	51	51	45	42	38
Nominal available pressure	3	kPa	86	86	87	85	76	64	58
Air 7 °C - Water 45 °C									
Rated heating capacity	4	kW	4,5	6,4	8,1	9,5	12,3	14,1	15,5
Total power input	4	kW	1,08	1,64	2,03	2,44	3,15	3,76	4,25
COP	4	-	4,17	3,91	4,00	3,90	3,90	3,75	3,65
Water flow-rate	4	l/s	0,2	0,3	0,4	0,5	0,6	0,7	0,7
Nominal available pressure	4	kPa	56	56	51	51	45	42	38
Nominal available pressure	4	kPa	86	86	85	79	62	52	45
Air 7 °C - Water 55 °C									
Rated heating capacity	5	kW	4,6	6,2	8,0	9,5	11,9	13,8	16,0
Total power input	5	kW	1,38	1,92	2,39	2,97	3,66	4,38	5,25
COP	5	-	3,33	3,23	3,35	3,20	3,25	3,15	3,05
Water flow-rate	5	l/s	0,1	0,2	0,2	0,3	0,4	0,4	0,5
Nominal available pressure	5	kPa	56	56	51	51	45	42	38
Nominal available pressure	5	kPa	88	86	87	87	87	83	76

Data according to EN 14511:2018.

1. inlet/outlet water temperature 30/35 °C, outdoor air temperature 7 °C dry bulb / 6 °C wet bulb
2. inlet/outlet water temperature 30/35 °C, outdoor air temperature 2 °C dry bulb / 1 °C wet bulb
3. inlet/outlet water temperature 30/35 °C, outdoor air temperature 7 °C dry bulb / 8 °C wet bulb
4. water inlet/outlet temperature 40/45°C, outdoor air temperature 7°C dry bulb / 6°C wet bulb
5. water inlet/outlet temperature 47/55°C, outdoor air temperature 7°C dry bulb / 6°C wet bulb

Cooling

Size			2.1	3.1	4.1 / 4.1T	5.1 /5.1T	6.1 / 6.1T	7.1 / 7.1T	8.1 / 8.1T
Air 35 °C - Water 18 °C									
Nominal cooling capacity	1	kW	4,5	6,5	8,3	10,0	12,0	14,0	15,0
Total power input	1	kW	0,80	1,18	1,58	2,17	2,61	3,18	3,53
EER	1	-	5,65	5,51	5,25	4,60	4,60	4,40	4,25
Water flow-rate	1	l/s	0,2	0,3	0,4	0,5	0,6	0,7	0,7
Nominal available pressure	1	kPa	56	56	51	51	45	42	38
Nominal available pressure	1	kPa	86	85	84	76	64	53	48
Air 35 °C - Water 7 °C									
Nominal cooling capacity	2	kW	4,7	6,8	7,5	8,1	11,5	12,4	14,0
Total power input	2	kW	1,29	2,19	2,22	2,61	3,77	4,13	5,19
EER	2	-	3,65	3,10	3,35	3,10	3,05	3,00	2,70
Water flow-rate	2	l/s	0,2	0,3	0,4	0,4	0,5	0,6	0,7
Nominal available pressure	2	kPa	56	56	51	51	45	42	38
Nominal available pressure	2	kPa	86	85	87	85	67	62	53

Data according to EN 14511:2018.
1. water inlet/outlet temperature 23/18°C, outdoor air temperature 35°C dry bulb / 27°C wet bulb
2. water inlet/outlet temperature 12/7°C, outdoor air temperature 35°C dry bulb / 27°C wet bulb

ErP

Size			2.1	3.1	4.1 / 4.1T	5.1 /5.1T	6.1 / 6.1T	7.1 / 7.1T	8.1 / 8.1T
Nominal power			**4**	**6**	**8**	**10**	**12**	**14**	**16**
Average climatic conditions - Heat pump for Average temperature application									
Nominal power	1	kW	5	6	8	10	12	14	15
SCOP	1	-	3,91	3,98	4,08	4,02	3,96	3,87	3,87
Generator energy class	1	-	A+++	A+++	A+++	A+++	A+++	A+++	A+++
ns	1	%	153	156	160	158	155	152	152
Average climatic conditions - Heat pump for Low temperature application									
Nominal power	2	kW	5	6	8	10	12	14	16
SCOP	2	-	5,10	5,00	5,35	5,33	4,94	4,76	4,72
Generator energy class	2	-	A+++	A+++	A+++	A+++	A+++	A+++	A+++
ns	2	%	206	199	211	210	195	188	186
Average climatic conditions - Heat pump for application with Fan coil									
Nominal power	3	kW	5	7	8	10	12	14	16
SEER	3	-	5,23	5,32	5,61	5,53	4,99	4,97	4,98
ns	3	%	206	210	221	218	197	196	196

The product is conforming with the European ErP Directives, which includes Commission Delegated Regulation (EU) no. 811/2018 and Commission Delegated Regulation no. 813/2018.
Data according to EN 14825
1. Average climate, Medium temperature 47/55°C
2. Average climate, Low temperature 30/35°C
3. Average climate, Low temperature 12/7°C

Technical characteristics

Size				2.1	3.1	4.1 / 4.1T	5.1 /5.1T	6.1 / 6.1T	7.1 / 7.1T	8.1 / 8.1T
Nominal power				**4**	**6**	**8**	**10**	**12**	**14**	**16**
Refrigeration circuit										
Compressor	n°/type	-	-	1	1	1	1	1	1	1
	type	-	-				Twin Rotary			
Oil	load	-	ml	600	600	830	830	1100	1100	1100
Refrigerant	type/GWP	1	-				R290 / 0.02			
	load	-	kg	1.05	1.05	1.1	1.1	1.5	1.5	1.5
	Equiv, CO_2	-	tCO_2	0.02	0.02	0.02	0.02	0.03	0.03	0.03
Fans	number			1	1	1	1	1	1	1
	flow-rate	-	m^3/h	4350	4350	4700	4700	4800	4800	4800
Water circuit										
Minimum system water content		-	l				70			
Admissible water flow rate	minimum	2	l/s				0.11			
	maximum	-	l/s	0.42	0.42	0.64	0.69	0.89	1.00	1.08
Maximum system pressure		-	bar				3			
Hydraulic connections		-	inch				1" 1/4			
Dimensions and weights										
Dimensions (Length x Height x Depth)	unit	-	mm				1330x1051x528			
	packaging	-	mm				1390x1220x610			
Weight	unit	-	kg	150	150	155 / 160	155 / 160	175 / 180	175 / 180	175 / 180
	packaging	-	kg	170	170	175 / 180	175 / 180	195 / 200	195 / 200	195 / 200

1. Consider the water content of the area with less volume

Sound levels

SIZES			2.1	3.1	4.1 / 4.1T	5.1 /5.1T	6.1 / 6.1T	7.1 / 7.1T	8.1 / 8.1T
Sound power	Heating ErP (part load C)	dB(A)	46	46	47	47	48	48	48
	Heating rated	dB(A)	48	49	50	52	52	55	56
	Maximum heating	dB(A)	53	54	55	56	59	60	61
	Heating silent mode	dB(A)	47	48	49	51	54	55	57
	Heating super-silent mode	dB(A)	46	47	48	50	53	53	54
	Heating A2W55 (part load B)	dB(A)	50	51	52	54	55	56	57
	Cooling nominal	dB(A)	49	50	51	52	54	55	57
	Cooling max	dB(A)	52	53	54	55	58	59	60
	Cooling silent mode	dB(A)	49	50	51	52	52	53	54
	Cooling super silent mode	dB(A)	48	49	50	51	51	52	53
Sound pressure @1m	Heating rated	dB(A)	33	34	35	37	37	40	41
	Maximum heating	dB(A)	38	39	40	41	44	45	46
	Heating silent mode	dB(A)	32	33	34	36	39	40	42
	Heating super-silent mode	dB(A)	31	32	33	35	38	38	39
	Cooling nominal	dB(A)	34	35	36	37	39	40	42
	Maximum cooling	dB(A)	37	38	39	40	43	44	45
	Cooling silent mode	dB(A)	34	35	36	37	37	38	39
	Cooling super silent mode	dB(A)	33	34	35	36	36	37	38

Reference standard: EN12102-1
Reference conditions:
Heating: inlet/outlet water temperature 30/35°C, outdoor air temperature 7°C dry bulb / 6°C wet bulb
Cooling: inlet/outlet water temperature 23/18°C, outdoor air temperature 35°C dry bulb / 27°C wet bulb

Operating range

Cooling

2.1 ÷ 8.1

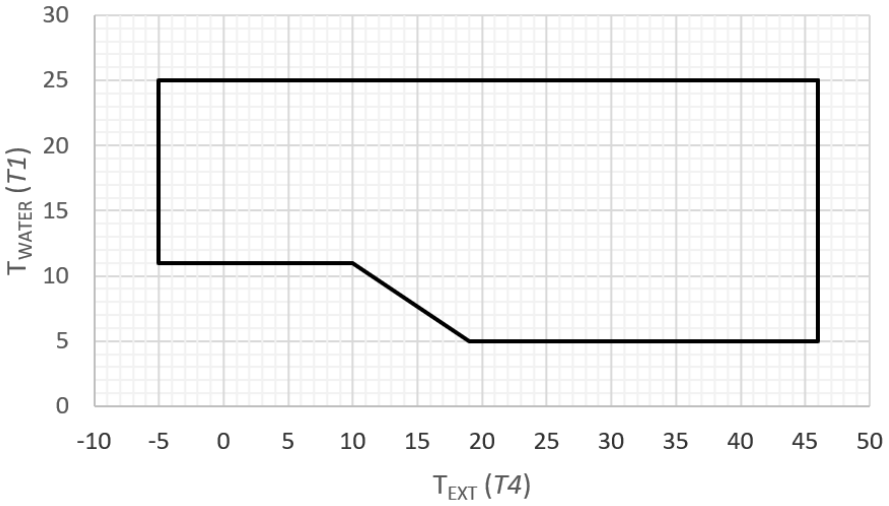

1. The heat pump switches off and only works IBH/AHS

----- maximum water inlet temperature for heat pump operation

Heating

2.1 ÷ 8.1

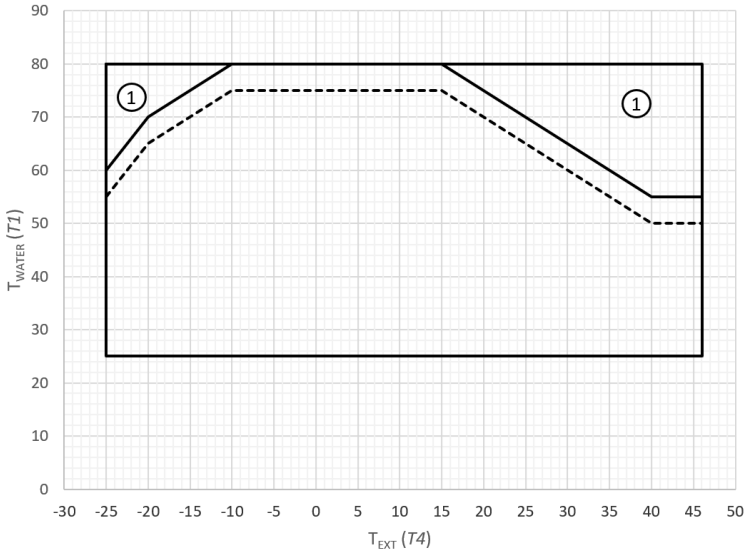

If the water in the hydraulic circuit is mixed with glycol, ensure that the anti-freeze valve is not installed in the system.

DHW

2.1 ÷ 8.1

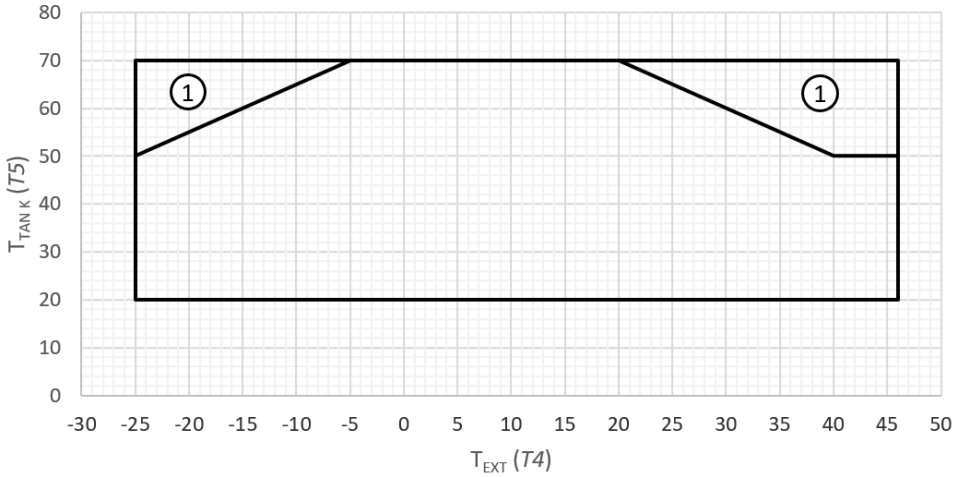

1. The heat pump switches off and only works IBH/AHS

Hydraulic data

2.1 ÷ 3.1

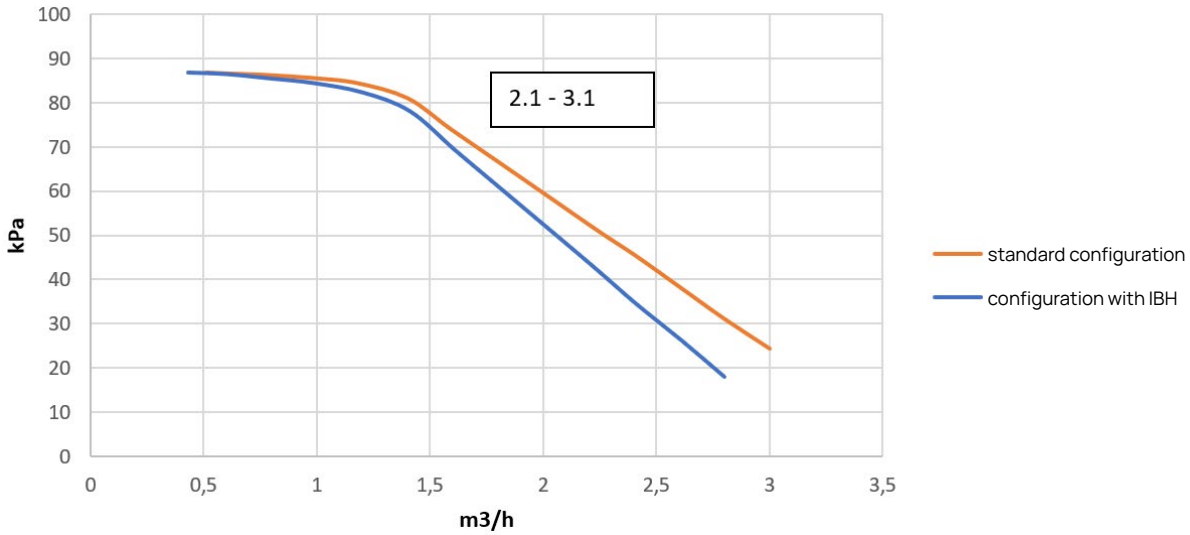

4.1 ÷ 8.1

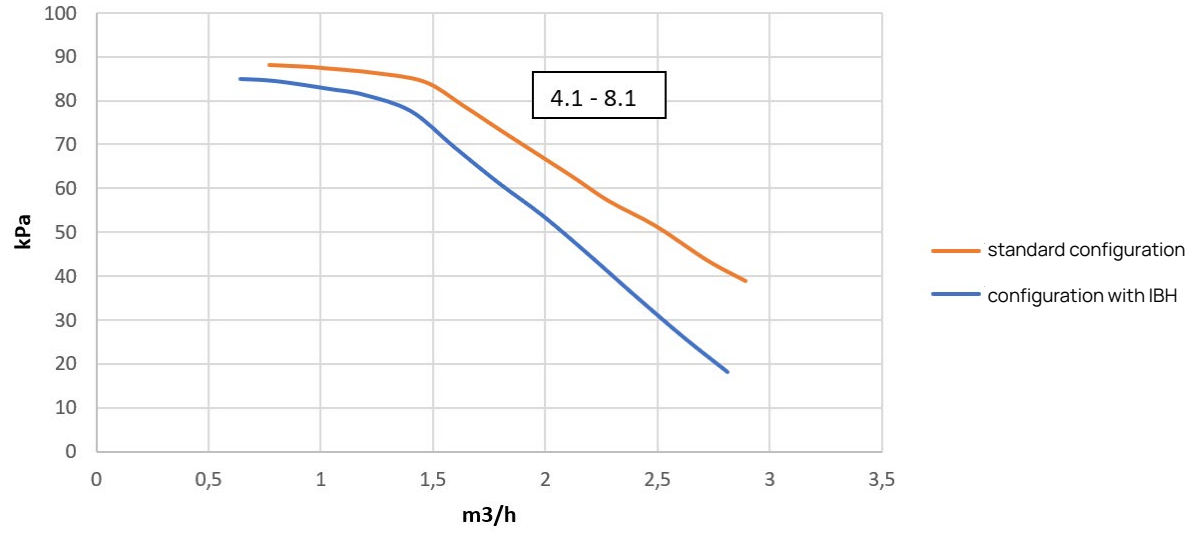

Dimensional

SIZE 2.1 ÷ 8.1

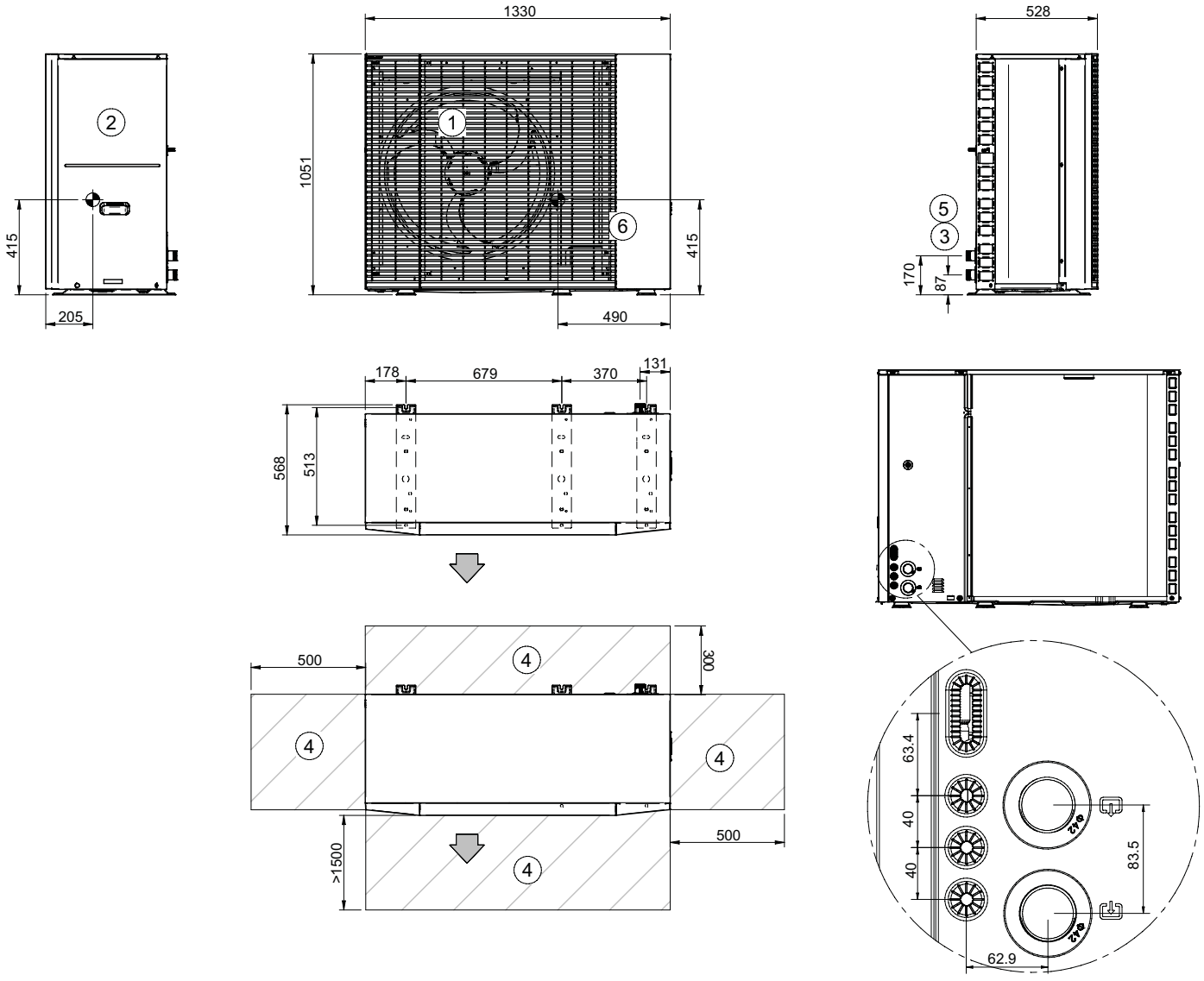

1. Electric fan
2. Electrical panel
3. Water connections
4. Functional spaces
5. Power input
6. Compressor compartment

Size		2.1 ÷ 8.1
Height	mm	1051
Length	mm	1330
Depth	mm	528

16. **ErP data**

Modello info prodotto /Product info template

Information requirements for heat pump space heaters and heat pump combination heaters. Informazioni obbligatorie per gli apparecchi a pompa di calore per il riscaldamento d'ambiente e gli apparecchi di riscaldamento misti a pompa di calore	
Model(s): / Modelli:	***aa***
Air-to-water heat pump: / Pompa di calore aria/acqua:	***ab***
Water-to-water heat pump: / Pompa di calore acqua/acqua:	***ac***
Brine-to-water heat pump: / Pompa di calore salamoia/acqua:	***ad***
Low-temperature heat pump: / Pompa di calore a bassa temperatura:	***ae***
Equipped with a supplementary heater: / Con riscaldatore supplementare:	***af***
Heat pump combination heater: / Apparecchio misto a pompa di calore:	***ag***
Heat pump combination heater: / Apparecchio misto a pompa di calore: Parameters shall be declared for medium-temperature application, except for low-temperature heat pumps. For low-temperature heat pumps, parameters shall be declared for low-temperature application. / I parametri sono dichiarati per l'applicazione a temperatura media, tranne per le pompe di calore a bassa temperatura Per le pompe di calore a bassa temperatura, i parametri sono dichiarati per l'applicazione a bassa temperatura.	
Parameters shall be declared for average climate conditions. / I parametri sono dichiarati per condizioni climatiche medie.	

Item / Elemento	Symbol / Simbolo	Value / Valore	Unit / Unità	Item / Elemento	Symbol / Simbolo	Value / Valore	Unit / Unità
Rated heat output (*) / Potenza termica nominale (*)	*Prated*	***ah***	kW	Seasonal space heating energy efficiency / Efficienza energetica stagionale del riscaldamento d'ambiente	ηs	***ai***	%
Declared capacity for heating for part load at indoor temperature 20 °C and outdoor temperature Tj / Capacità di riscaldamento dichiarata a carico parziale, con temperatura interna pari a 20 °C e temperatura esterna Tj				Declared coefficient of performance or primary energy ratio for part load at indoor temperature 20 °C and outdoor temperature Tj / Coefficiente di prestazione dichiarato o indice di energia primaria per carico parziale, con temperatura interna pari a 20 °C e temperatura esterna Tj			
Tj = - 7 °C	*Pdh*	***aj***	kW	*Tj = - 7 °C*	*COPd*	***at***	-
Tj = + 2 °C	*Pdh*	***ak***	kW	*Tj = + 2 °C*	*COPd*	***au***	-
Tj = + 7 °C	*Pdh*	***al***	kW	*Tj = + 7 °C*	*COPd*	***av***	-
Tj = + 12 °C	*Pdh*	***am***	kW	*Tj = + 12 °C*	*COPd*	***aw***	-
Tj = bivalent temperature / Temperatura bivalente	*Pdh*	***an***	kW	Tj = bivalent temperature / Temperatura bivalente	*COPd*	***ax***	-
Tj = operation limit temperature / temperatura limite di esercizio	*Pdh*	***ao***	kW	Tj = operation limit temperature / temperatura limite di esercizio	*COPd*	***ay***	-
For air-to-water heat pumps: Tj = – 15 °C (if TOL < – 20 °C) / Per le pompa di calore aria/ acqua: T j = – 15 °C (se TOL < – 20 °C)	*Pdh*	***ap***	kW	For air-to-water heat pumps: Tj = – 15 °C (if TOL < – 20 °C) / Per le pompa di calore aria/ acqua: T j = – 15 °C (se TOL < – 20 °C)	*COPd*	***az***	-
Bivalent temperature / Temperatura bivalente	*Tbiv*	***aq***	°C	For air-to-water heat pumps: Operation limit temperature / Per le pompe di calore aria/ acqua: temperatura limite di esercizio	*TOL*	***ba***	°C
Cycling interval capacity for heating / Ciclicità degli intervalli di capacità per il riscaldamento	*Pcych*	***ar***	kW	Cycling interval efficiency / Efficienza della ciclicità degli intervalli	*COPcych*	***bb***	-
Degradation co-efficient (**) / Coefficiente di degradazione (**)	*Cdh*	***as***	-	Heating water operating limit temperature / Temperatura limite di esercizio di riscaldamento dell'acqua	*WTOL*	***bc***	-

Power consumption in modes other than active mode / Consumo energetico in modi diversi dal modo attivo				Supplementary heater / Riscaldatore supplementare			
Off mode / Modo spento	*POFF*	**bd**	kW	Rated heat output (*) / Potenza termica nominale (*)	*Psup*	**bh**	kW
Thermostat-off mode / Modo termostato spento	*PTO*	**be**	kW				
Standby mode / Modo stand-by	*PSB*	**bf**	kW	Type of energy input / Tipo di alimentazione energetica	**bi**		
Crankcase heater mode / Modo riscaldamento del carter	*PCK*	**bg**	kW				
Other items / Altri elementi							
Capacity control / Controllo della capacità		**bj**		For air-to-water heat pumps: Rated air flow rate, outdoors / Per le pompe di calore aria/ acqua: portata d'aria, all'esterno	-	**bm**	m3/h
Sound power level, indoors/outdoors / Livello della potenza sonora, all'interno/all'esterno	*LWA*	**bk**	dB(A)	For water-/brine-to-water heat pumps: Rated brine or water flow rate, outdoor heat exchanger / Per le pompe di calore acqua/acqua e salamoia/acqua: flusso di salamoia o acqua nominale, scambiatore di calore all'esterno	-	**bn**	m3/h
Emissions of nitrogen oxides/Emissioni diossidi di azoto	*NOx*	**bl**	-				
For heat pump combination heater: / Per gli apparecchi di riscaldamento misti a pompa di calore:							
Declared load profile / Profilo di carico dichiarato	**bo**			Water heating energy efficiency / Efficienza energetica di riscaldamento dell'acqua	*ηwh*	**bq**	%
Daily electricity consumption / Consumo quotidiano di energia elettrica	*Qelec*	**bp**	kWh	Daily fuel consumption / Consumo annuo di combustibile	*Qfuel*	**br**	kWh
Contact details: / Recapiti:	CLIVET SPA - VIA CAMP LONC, 25 - Z.I. VILLAPAIERA - 32032 FELTRE (BL) - ITALY						

(*) For heat pump space heaters and heat pump combination heaters, the rated heat output Prated is equal to the design load for heating Pdesignh, and the rated heat output of a supplementary heater Psup is equal to the supplementary capacity for heating sup(Tj).
(**) If Cdh is not determined by measurement then the default degradation coefficient is Cdh = 0,9. /
(*) Per gli apparecchi a pompa di calore per il riscaldamento d'ambiente e gli apparecchi di riscaldamento misti a pompa di calore, la potenza termica nominale Pnominale è pari al carico teorico per il riscaldamento Pdesignh e la potenza termica nominale di un riscaldatore supplementare Psup è pari alla capacità supplementare di riscaldamento sup(Tj).
(**) Se Cdh non è determinato mediante misurazione, il coefficiente di degradazione è Cdh = 0,9.

Modello scheda prodotto / Product card model

Product fiche: combination heaters Scheda prodotto: apparecchi di riscaldamento misti			
SERIES / Serie		***ca***	
Model / Modello	1	-	***cb***
Size / Grandezza	2	-	***cc***
Medium-temperature application /Applicazione a media temperatura	3	°C	***cd***
Low-temperature application /Applicazione a bassa temperatura	4	°C	***ce***
Medium-temperature class / Classe a media temperatura	6	-	***cf***
Low-temperature class / Classe a bassa temperatura	7	-	***cg***
Ptn	9	kW	***ch***
Qhe_ambiente	10	kWh	***ci***
ηs	12	%	***cj***
LwA_in	14	dB	***ck***
Precautions / Precauzioni	16	See installation and operating manual / Vedi manuale di uso e manutenzione	
LwA_out	27	dB	***cl***

			MEDIUM TEMPERATURE		
ID	Description	Symbol	2,1	3,1	4,1
aa	Model(s): / Modelli:	-	WiSAN-PMP 1S 2.1	WiSAN-PMP 1S 3.1	WiSAN-PMP 1S 4.1
ab	Air-to-water heat pump: / Pompa di calore aria/acqua:	-	YES	YES	YES
ac	Water-to-water heat pump: / Pompa di calore acqua/acqua:	-	NO	NO	NO
ad	Brine-to-water heat pump: / Pompa di calore salamoia/acqua:	-	NO	NO	NO
ae	Low-temperature heat pump: / Pompa di calore a bassa temperatura:	-	NO	NO	NO
af	Equipped with a supplementary heater: / Con riscaldatore supplementare:	-	NO	NO	NO
ag	Heat pump combination heater: / Apparecchio misto a pompa di calore:	-	NO	NO	NO
ah	Rated heat output (*) / Potenza termica nominale (*)	Prated	5	6	8
ai	Seasonal space heating energy efficiency / Efficienza energetica stagionale del riscaldamento d'ambiente	ηs	153	156	160
aj	Tj = - 7 °C	Pdh	4,50	5,51	7,26
ak	Tj = + 2 °C	Pdh	2,88	3,22	4,51
al	Tj = + 7 °C	Pdh	2,61	2,61	3,72
am	Tj = + 12 °C	Pdh	2,41	3,07	4,40
an	Tj = bivalent temperature / Temperatura bivalente	Pdh	4,50	5,51	7,26
ao	Tj = operation limit temperature / Temperatura limite di esercizio	Pdh	4,64	6,00	8,20
ap	For air-to-water heat pumps: Tj = – 15 °C (if TOL < – 20 °C) / Per le pompa di calore aria/ acqua: T j = – 15 °C (se TOL < – 20 °C)	Pdh	-	-	-
aq	Bivalent temperature / Temperatura bivalente	Tbiv	-7	-7	-7
ar	Cycling interval capacity for heating / Ciclicità degli intervalli di capacità per il riscaldamento	Pcych	-	-	-
as	Degradation co-efficient (**) / Coefficiente di degradazione (**)	Cdh	0,97	0,97	0,97
at	Tj = - 7 °C	COPd	2,50	2,44	2,48
au	Tj = + 2 °C	COPd	3,77	3,96	4,04
av	Tj = + 7 °C	COPd	5,03	5,03	5,30
aw	Tj = + 12 °C	COPd	7,30	6,73	6,90
ax	Tj = bivalent temperature / Temperatura bivalente	COPd	2,50	2,44	2,46
ay	Tj = operation limit temperature / Temperatura limite di esercizio	COPd	2,22	2,09	2,11
az	For air-to-water heat pumps: Tj = – 15 °C (if TOL < – 20 °C) / Per le pompa di calore aria/ acqua: T j = – 15 °C (se TOL < – 20 °C)	COPd	-	-	-
ba	For air-to-water heat pumps: Operation limit temperature / Per le pompe di calore aria/ acqua: temperatura limite di esercizio	TOL	-10	-10	-10
bb	Cycling interval efficiency / Efficienza della ciclicità degli intervalli	COP cych	-	-	-
bc	Heating water operating limit temperature / Temperatura limite di esercizio di riscaldamento dell'acqua	WTOL	80	80	80
bd	Off mode / Modo spento	POFF	0,015	0,015	0,015
be	Thermostat-off mode / Modo termostato spento	PTO	0,015	0,015	0,015
bf	Standby mode / Modo stand-by	PSB	0,015	0,015	0,015
bg	Crankcase heater mode / Modo riscaldamento del carter	PCK	0,015	0,015	0,015
bh	Rated heat output (*) / Potenza termica nominale (*)	Psup	0,4	0,0	0,0
bi	Type of energy input / Tipo di alimentazione energetica		-	-	-
bj	Capacity control / Controllo della capacità		Variable / Variabile	Variable / Variabile	Variable / Variabile
bk	Sound power level, indoors/outdoors / Livello della potenza sonora, all'interno/all'esterno	LWA	46	46	47
bl	Emissions of nitrogen oxides/Emissioni diossidi di azoto	NOx	0	0	0
bm	For air-to-water heat pumps: Rated air flow rate, outdoors / Per le pompe di calore aria/ acqua: portata d'aria, all'esterno		3900	3900	4680
bn	For water-/brine-to-water heat pumps: Rated brine or water flow rate, outdoor heat exchanger / Per le pompe di calore acqua/acqua e salamoia/acqua: flusso di salamoia o acqua nominale, scambiatore di calore all'esterno		-	-	-
bo	Declared load profile / Profilo di carico dichiarato		-	-	-
bp	Daily electricity consumption / Consumo quotidiano di energia elettrica	kWh	-	-	-
bq	Water heating energy efficiency / Efficienza energetica di riscaldamento dell'acqua	ηwh	-	-	-
br	Daily fuel consumption / Consumo annuo di combustibile	kWh	-	-	-

ca	SERIES / Serie	-	-	-	-
cb	Model / Modello	-	WiSAN-PMP 1S 2.1	WiSAN-PMP 1S 3.1	WiSAN-PMP 1S 4.1
cc	Size / Grandezza	-	2,1	3,1	4,1
cd	Medium-temperature application / Applicazione a media temperatura	°C	55	55	55
ce	Low-temperature application / Applicazione a bassa temperatura	°C	35	35	35
cf	Medium-temperature class / Classe a media temperatura	-	A+++	A+++	A+++
cg	Low-temperature class / Classe a bassa temperatura	-	A+++	A+++	A+++
ch	Ptn	kW	5	6	8
ci	Qhe_ambiente	kWh	2646	3119	4168
cj	ηs	%	153	156	160
ck	LwA_in	dB(A)	-	-	-
cl	LwA_out	dB(A)	46	46	47

			MEDIUM TEMPERATURE		
ID	Description	Symbol	4.1T	5,1	5.1T
aa	Model(s): / Modelli:	-	WiSAN-PMP 1S 4.1T	WiSAN-PMP 1S 5.1	WiSAN-PMP 1S 5.1T
ab	Air-to-water heat pump: / Pompa di calore aria/acqua:	-	YES	YES	YES
ac	Water-to-water heat pump: / Pompa di calore acqua/acqua:	-	NO	NO	NO
ad	Brine-to-water heat pump: / Pompa di calore salamoia/acqua:	-	NO	NO	NO
ae	Low-temperature heat pump: / Pompa di calore a bassa temperatura:	-	NO	NO	NO
af	Equipped with a supplementary heater: / Con riscaldatore supplementare:	-	NO	NO	NO
ag	Heat pump combination heater: / Apparecchio misto a pompa di calore:	-	NO	NO	NO
ah	Rated heat output (*) / Potenza termica nominale (*)	Prated	8	10	10
ai	Seasonal space heating energy efficiency / Efficienza energetica stagionale del riscaldamento d'ambiente	ηs	160	158	158
aj	Tj = - 7 °C	Pdh	7,26	8,85	8,85
ak	Tj = + 2 °C	Pdh	4,51	5,48	5,48
al	Tj = + 7 °C	Pdh	3,72	3,78	3,78
am	Tj = + 12 °C	Pdh	4,40	4,43	4,43
an	Tj = bivalent temperature / Temperatura bivalente	Pdh	7,26	8,85	8,85
ao	Tj = operation limit temperature / Temperatura limite di esercizio	Pdh	8,20	8,98	8,98
ap	For air-to-water heat pumps: Tj = – 15 °C (if TOL < – 20 °C) / Per le pompa di calore aria/ acqua: T j = – 15 °C (se TOL < – 20 °C)	Pdh	-	-	-
aq	Bivalent temperature / Temperatura bivalente	Tbiv	-7	-7	-7
ar	Cycling interval capacity for heating / Ciclicità degli intervalli di capacità per il riscaldamento	Pcych	-	-	-
as	Degradation co-efficient (**) / Coefficiente di degradazione (**)	Cdh	0,97	0,97	0,97
at	Tj = - 7 °C	COPd	2,48	2,25	2,25
au	Tj = + 2 °C	COPd	4,04	4,00	4,00
av	Tj = + 7 °C	COPd	5,30	5,50	5,50
aw	Tj = + 12 °C	COPd	6,90	7,03	7,03
ax	Tj = bivalent temperature / Temperatura bivalente	COPd	2,46	2,23	2,23
ay	Tj = operation limit temperature / Temperatura limite di esercizio	COPd	2,11	2,06	2,06
az	For air-to-water heat pumps: Tj = – 15 °C (if TOL < – 20 °C) / Per le pompa di calore aria/ acqua: T j = – 15 °C (se TOL < – 20 °C)	COPd	-	-	-
ba	For air-to-water heat pumps: Operation limit temperature / Per le pompe di calore aria/ acqua: temperatura limite di esercizio	TOL	-10	-10	-10
bb	Cycling interval efficiency / Efficienza della ciclicità degli intervalli	COPcych	-	-	-
bc	Heating water operating limit temperature / Temperatura limite di esercizio di riscaldamento dell'acqua	WTOL	80	80	80
bd	Off mode / Modo spento	POFF	0,015	0,015	0,015
be	Thermostat-off mode / Modo termostato spento	PTO	0,015	0,015	0,015
bf	Standby mode / Modo stand-by	PSB	0,015	0,015	0,015
bg	Crankcase heater mode / Modo riscaldamento del carter	PCK	0,015	0,015	0,015
bh	Rated heat output (*) / Potenza termica nominale (*)	Psup	0,0	1,0	1,0
bi	Type of energy input / Tipo di alimentazione energetica		-	-	-
bj	Capacity control / Controllo della capacità		Variable / Variabile	Variable / Variabile	Variable / Variabile
bk	Sound power level, indoors/outdoors / Livello della potenza sonora, all'interno/all'esterno	LWA	47	47	47
bl	Emissions of nitrogen oxides/Emissioni diossidi di azoto	NOx	0	0	0
bm	For air-to-water heat pumps: Rated air flow rate, outdoors / Per le pompe di calore aria/ acqua: portata d'aria, all'esterno		4680	4680	4680
bn	For water-/brine-to-water heat pumps: Rated brine or water flow rate, outdoor heat exchanger / Per le pompe di calore acqua/acqua e salamoia/acqua: flusso di salamoia o acqua nominale, scambiatore di calore all'esterno		-	-	-
bo	Declared load profile / Profilo di carico dichiarato		-	-	-
bp	Daily electricity consumption / Consumo quotidiano di energia elettrica	kWh	-	-	-
bq	Water heating energy efficiency / Efficienza energetica di riscaldamento dell'acqua	ηwh	-	-	-
br	Daily fuel consumption / Consumo annuo di combustibile	kWh	-	-	-

ca	SERIES / Serie	-	-	-	-
cb	Model / Modello	-	WiSAN-PMP 1S 4.1T	WiSAN-PMP 1S 5.1	WiSAN-PMP 1S 5.1T
cc	Size / Grandezza	-	4.1T	5,1	5.1T
cd	Medium-temperature application / Applicazione a media temperatura	°C	55	55	55
ce	Low-temperature application / Applicazione a bassa temperatura	°C	35	35	35
cf	Medium-temperature class / Classe a media temperatura	-	A+++	A+++	A+++
cg	Low-temperature class / Classe a bassa temperatura	-	A+++	A+++	A+++
ch	Ptn	kW	8	10	10
ci	Qhe_ambiente	kWh	4168	5148	5148
cj	ηs	%	160	158	158
ck	LwA_in	dB(A)	-	-	-
cl	LwA_out	dB(A)	47	47	47

			MEDIUM TEMPERATURE		
ID	**Description**	**Symbol**	6,1	6.1 T	7,1
aa	**Model(s): / Modelli:**	-	WiSAN-PMP 1S 6.1	WiSAN-PMP 1S 6.1T	WiSAN-PMP 1S 7.1
ab	**Air-to-water heat pump: / Pompa di calore aria/acqua:**	-	YES	YES	YES
ac	**Water-to-water heat pump: / Pompa di calore acqua/acqua:**	-	NO	NO	NO
ad	**Brine-to-water heat pump: / Pompa di calore salamoia/acqua:**	-	NO	NO	NO
ae	**Low-temperature heat pump: / Pompa di calore a bassa temperatura:**	-	NO	NO	NO
af	**Equipped with a supplementary heater: / Con riscaldatore supplementare:**	-	NO	NO	NO
ag	**Heat pump combination heater: / Apparecchio misto a pompa di calore:**	-	NO	NO	NO
ah	**Rated heat output (*) / Potenza termica nominale (*)**	**Prated**	12	12	14
ai	**Seasonal space heating energy efficiency / Efficienza energetica stagionale del riscaldamento d'ambiente**	**ηs**	155	155	152
aj	**Tj = - 7 °C**	**Pdh**	10,70	10,70	12,21
ak	**Tj = + 2 °C**	**Pdh**	6,74	6,74	7,51
al	**Tj = + 7 °C**	**Pdh**	5,32	5,32	5,15
am	**Tj = + 12 °C**	**Pdh**	5,94	5,94	6,13
an	**Tj = bivalent temperature / Temperatura bivalente**	**Pdh**	10,70	10,70	12,21
ao	**Tj = operation limit temperature / Temperatura limite di esercizio**	**Pdh**	11,27	11,27	12,25
ap	**For air-to-water heat pumps: Tj = – 15 °C (if TOL < – 20 °C) / Per le pompa di calore aria/ acqua: T j = – 15 °C (se TOL < – 20 °C)**	**Pdh**	-	-	-
aq	**Bivalent temperature / Temperatura bivalente**	**Tbiv**	-7	-7	-7
ar	**Cycling interval capacity for heating / Ciclicità degli intervalli di capacità per il riscaldamento**	**Pcych**	-	-	-
as	**Degradation co-efficient (**) / Coefficiente di degradazione (**)**	**Cdh**	0,97	0,97	0,97
at	**Tj = - 7 °C**	**COPd**	2,52	2,52	2,25
au	**Tj = + 2 °C**	**COPd**	3,83	3,83	3,75
av	**Tj = + 7 °C**	**COPd**	5,25	5,25	5,40
aw	**Tj = + 12 °C**	**COPd**	6,46	6,46	6,87
ax	**Tj = bivalent temperature / Temperatura bivalente**	**COPd**	2,52	2,52	2,23
ay	**Tj = operation limit temperature / Temperatura limite di esercizio**	**COPd**	2,01	2,01	1,97
az	**For air-to-water heat pumps: Tj = – 15 °C (if TOL < – 20 °C) / Per le pompa di calore aria/ acqua: T j = – 15 °C (se TOL < – 20 °C)**	**COPd**	-	-	-
ba	**For air-to-water heat pumps: Operation limit temperature / Per le pompe di calore aria/ acqua: temperatura limite di esercizio**	**TOL**	-10	-10	-10
bb	**Cycling interval efficiency / Efficienza della ciclicità degli intervalli**	**COPcych**	-	-	-
bc	**Heating water operating limit temperature / Temperatura limite di esercizio di riscaldamento dell'acqua**	**WTOL**	80	80	80
bd	**Off mode / Modo spento**	**POFF**	0,015	0,015	0,015
be	**Thermostat-off mode / Modo termostato spento**	**PTO**	0,015	0,015	0,015
bf	**Standby mode / Modo stand-by**	**PSB**	0,015	0,015	0,015
bg	**Crankcase heater mode / Modo riscaldamento del carter**	**PCK**	0,015	0,015	0,015
bh	**Rated heat output (*) / Potenza termica nominale (*)**	**Psup**	0,7	0,7	1,8
bi	**Type of energy input / Tipo di alimentazione energetica**		-	-	-
bj	**Capacity control / Controllo della capacità**		Variable / Variabile	Variable / Variabile	Variable / Variabile
bk	**Sound power level, indoors/outdoors / Livello della potenza sonora, all'interno/all'esterno**	**LWA**	48	48	48
bl	**Emissions of nitrogen oxides/Emissioni diossidi di azoto**	**NOx**	0	0	0
bm	**For air-to-water heat pumps: Rated air flow rate, outdoors / Per le pompe di calore aria/ acqua: portata d'aria, all'esterno**		4780	4780	4780
bn	**For water-/brine-to-water heat pumps: Rated brine or water flow rate, outdoor heat exchanger / Per le pompe di calore acqua/acqua e salamoia/acqua: flusso di salamoia o acqua nominale, scambiatore di calore all'esterno**		-	-	-
bo	**Declared load profile / Profilo di carico dichiarato**		-	-	-
bp	**Daily electricity consumption / Consumo quotidiano di energia elettrica**	**kWh**	-	-	-
bq	**Water heating energy efficiency / Efficienza energetica di riscaldamento dell'acqua**	**ηwh**	-	-	-
br	**Daily fuel consumption / Consumo annuo di combustibile**	**kWh**	-	-	-

ca	**SERIES / Serie**	-	-	-	-
cb	**Model / Modello**	-	WiSAN-PMP 1S 6.1	WiSAN-PMP 1S 6.1T	WiSAN-PMP 1S 7.1
cc	**Size / Grandezza**	-	6,1	6.1T	7,1
cd	**Medium-temperature application / Applicazione a media temperatura**	**°C**	55	55	55
ce	**Low-temperature application / Applicazione a bassa temperatura**	**°C**	35	35	35
cf	**Medium-temperature class / Classe a media temperatura**	-	A+++	A+++	A+++
cg	**Low-temperature class / Classe a bassa temperatura**	-	A+++	A+++	A+++
ch	**Ptn**	**kW**	12	12	14
ci	**Qhe_ambiente**	**kWh**	6312	6312	7405
cj	**ηs**	**%**	155	155	152
ck	**LwA_in**	**dB(A)**	-	-	-
cl	**LwA_out**	**dB(A)**	48	48	48

			MEDIUM TEMPERATURE		
ID	Description	Symbol	7.1T	8,1	8.1T
aa	Model(s): / Modelli:	-	WiSAN-PMP 1S 7.1T	WiSAN-PMP 1S 8.1	WiSAN-PMP 1S 8.1T
ab	Air-to-water heat pump: / Pompa di calore aria/acqua:	-	YES	YES	YES
ac	Water-to-water heat pump: / Pompa di calore acqua/acqua:	-	NO	NO	NO
ad	Brine-to-water heat pump: / Pompa di calore salamoia/acqua:	-	NO	NO	NO
ae	Low-temperature heat pump: / Pompa di calore a bassa temperatura:	-	NO	NO	NO
af	Equipped with a supplementary heater: / Con riscaldatore supplementare:	-	NO	NO	NO
ag	Heat pump combination heater: / Apparecchio misto a pompa di calore:	-	NO	NO	NO
ah	Rated heat output (*) / Potenza termica nominale (*)	Prated	14	15	15
ai	Seasonal space heating energy efficiency / Efficienza energetica stagionale del riscaldamento d'ambiente	ηs	152	152	152
aj	Tj = - 7 °C	Pdh	12,21	13,00	13,00
ak	Tj = + 2 °C	Pdh	7,51	7,96	7,96
al	Tj = + 7 °C	Pdh	5,15	5,34	5,34
am	Tj = + 12 °C	Pdh	6,13	5,98	5,98
an	Tj = bivalent temperature / Temperatura bivalente	Pdh	12,21	13,00	13,00
ao	Tj = operation limit temperature / Temperatura limite di esercizio	Pdh	12,25	13,39	13,39
ap	For air-to-water heat pumps: Tj = – 15 °C (if TOL < – 20 °C) / Per le pompa di calore aria/ acqua: T j = – 15 °C (se TOL < – 20 °C)	Pdh	-	-	-
aq	Bivalent temperature / Temperatura bivalente	Tbiv	-7	-7	-7
ar	Cycling interval capacity for heating / Ciclicità degli intervalli di capacità per il riscaldamento	Pcych	-	-	-
as	Degradation co-efficient (**) / Coefficiente di degradazione (**)	Cdh	0,97	0,97	0,97
at	Tj = - 7 °C	COPd	2,25	2,35	2,35
au	Tj = + 2 °C	COPd	3,75	3,70	3,70
av	Tj = + 7 °C	COPd	5,40	5,40	5,40
aw	Tj = + 12 °C	COPd	6,87	6,58	6,58
ax	Tj = bivalent temperature / Temperatura bivalente	COPd	2,23	2,33	2,33
ay	Tj = operation limit temperature / Temperatura limite di esercizio	COPd	1,97	1,95	1,95
az	For air-to-water heat pumps: Tj = – 15 °C (if TOL < – 20 °C) / Per le pompa di calore aria/ acqua: T j = – 15 °C (se TOL < – 20 °C)	COPd	-	-	-
ba	For air-to-water heat pumps: Operation limit temperature / Per le pompe di calore aria/ acqua: temperatura limite di esercizio	TOL	-10	-10	-10
bb	Cycling interval efficiency / Efficienza della ciclicità degli intervalli	COPcych	-	-	-
bc	Heating water operating limit temperature / Temperatura limite di esercizio di riscaldamento dell'acqua	WTOL	80	80	80
bd	Off mode / Modo spento	POFF	0,015	0,015	0,015
be	Thermostat-off mode / Modo termostato spento	PTO	0,015	0,015	0,015
bf	Standby mode / Modo stand-by	PSB	0,015	0,015	0,015
bg	Crankcase heater mode / Modo riscaldamento del carter	PCK	0,015	0,015	0,015
bh	Rated heat output (*) / Potenza termica nominale (*)	Psup	1,8	1,6	1,6
bi	Type of energy input / Tipo di alimentazione energetica		-	-	-
bj	Capacity control / Controllo della capacità		Variable / Variabile	Variable / Variabile	Variable / Variabile
bk	Sound power level, indoors/outdoors / Livello della potenza sonora, all'interno/all'esterno	LWA	48	48	48
bl	Emissions of nitrogen oxides/Emissioni diossidi di azoto	NOx	0	0	0
bm	For air-to-water heat pumps: Rated air flow rate, outdoors / Per le pompe di calore aria/ acqua: portata d'aria, all'esterno		4780	4780	4780
bn	For water-/brine-to-water heat pumps: Rated brine or water flow rate, outdoor heat exchanger / Per le pompe di calore acqua/acqua e salamoia/acqua: flusso di salamoia o acqua nominale, scambiatore di calore all'esterno		-	-	-
bo	Declared load profile / Profilo di carico dichiarato		-	-	-
bp	Daily electricity consumption / Consumo quotidiano di energia elettrica	kWh	-	-	-
bq	Water heating energy efficiency / Efficienza energetica di riscaldamento dell'acqua	ηwh	-	-	-
br	Daily fuel consumption / Consumo annuo di combustibile	kWh	-	-	-

ca	SERIES / Serie	-	-	-	-
cb	Model / Modello	-	WiSAN-PMP 1S 7.1T	WiSAN-PMP 1S 8.1	WiSAN-PMP 1S 8.1T
cc	Size / Grandezza	-	7.1T	8,1	8.1 T
cd	Medium-temperature application / Applicazione a media temperatura	°C	55	55	55
ce	Low-temperature application / Applicazione a bassa temperatura	°C	35	35	35
cf	Medium-temperature class / Classe a media temperatura	-	A+++	A+++	A+++
cg	Low-temperature class / Classe a bassa temperatura	-	A+++	A+++	A+++
ch	Ptn	kW	14	15	15
ci	Qhe_ambiente	kWh	7405	7862	7862
cj	ηs	%	152	152	152
ck	LwA_in	dB(A)	-	-	-
cl	LwA_out	dB(A)	48	48	48

			LOW TEMPERATURE		
ID	Description	Symbol	2,1	3,1	4,1
aa	Model(s): / Modelli:	-	WiSAN-PMP 1S 2.1	WiSAN-PMP 1S 3.1	WiSAN-PMP 1S 4.1
ab	Air-to-water heat pump: / Pompa di calore aria/acqua:	-	YES	YES	YES
ac	Water-to-water heat pump: / Pompa di calore acqua/acqua:	-	NO	NO	NO
ad	Brine-to-water heat pump: / Pompa di calore salamoia/acqua:	-	NO	NO	NO
ae	Low-temperature heat pump: / Pompa di calore a bassa temperatura:	-	YES	YES	YES
af	Equipped with a supplementary heater: / Con riscaldatore supplementare:	-	NO	NO	NO
ag	Heat pump combination heater: / Apparecchio misto a pompa di calore:	-	NO	NO	NO
ah	Rated heat output (*) / Potenza termica nominale (*)	Prated	5	6	8
ai	Seasonal space heating energy efficiency / Efficienza energetica stagionale del riscaldamento d'ambiente	ηs	206	199	211
aj	Tj = - 7 °C	Pdh	4,33	5,52	6,99
ak	Tj = + 2 °C	Pdh	2,69	3,34	4,51
al	Tj = + 7 °C	Pdh	2,88	2,88	3,88
am	Tj = + 12 °C	Pdh	3,29	3,29	4,52
an	Tj = bivalent temperature / Temperatura bivalente	Pdh	4,33	5,52	6,99
ao	Tj = operation limit temperature / Temperatura limite di esercizio	Pdh	4,90	6,01	7,90
ap	For air-to-water heat pumps: Tj = – 15 °C (if TOL < – 20 °C) / Per le pompa di calore aria/ acqua: T j = – 15 °C (se TOL < – 20 °C)	Pdh	-	-	-
aq	Bivalent temperature / Temperatura bivalente	Tbiv	-7	-7	-7
ar	Cycling interval capacity for heating / Ciclicità degli intervalli di capacità per il riscaldamento	Pcych	-	-	-
as	Degradation co-efficient (**) / Coefficiente di degradazione (**)	Cdh	0,97	0,97	0,97
at	Tj = - 7 °C	COPd	3,28	3,16	3,30
au	Tj = + 2 °C	COPd	5,09	4,89	5,30
av	Tj = + 7 °C	COPd	6,89	6,65	6,87
aw	Tj = + 12 °C	COPd	9,12	8,85	9,03
ax	Tj = bivalent temperature / Temperatura bivalente	COPd	3,28	3,16	3,30
ay	Tj = operation limit temperature / Temperatura limite di esercizio	COPd	2,92	2,80	2,85
az	For air-to-water heat pumps: Tj = – 15 °C (if TOL < – 20 °C) / Per le pompa di calore aria/ acqua: T j = – 15 °C (se TOL < – 20 °C)	COPd	-	-	-
ba	For air-to-water heat pumps: Operation limit temperature / Per le pompe di calore aria/ acqua: temperatura limite di esercizio	TOL	-10	-10	-10
bb	Cycling interval efficiency / Efficienza della ciclicità degli intervalli	COP cych	-	-	-
bc	Heating water operating limit temperature / Temperatura limite di esercizio di riscaldamento dell'acqua	WTOL	80	80	80
bd	Off mode / Modo spento	POFF	0,015	0,015	0,015
be	Thermostat-off mode / Modo termostato spento	PTO	0,015	0,015	0,015
bf	Standby mode / Modo stand-by	PSB	0,015	0,015	0,015
bg	Crankcase heater mode / Modo riscaldamento del carter	PCK	0,015	0,015	0,015
bh	Rated heat output (*) / Potenza termica nominale (*)	Psup	0,1	0,0	0,1
bi	Type of energy input / Tipo di alimentazione energetica		-	-	-
bj	Capacity control / Controllo della capacità		Variable / Variabile	Variable / Variabile	Variable / Variabile
bl	Emissions of nitrogen oxides/Emissioni diossidi di azoto	NOx	0	0	0
bm	For air-to-water heat pumps: Rated air flow rate, outdoors / Per le pompe di calore aria/ acqua: portata d'aria, all'esterno		3900	3900	4680
bn	For water-/brine-to-water heat pumps: Rated brine or water flow rate, outdoor heat exchanger / Per le pompe di calore acqua/acqua e salamoia/acqua: flusso di salamoia o acqua nominale, scambiatore di calore all'esterno		-	-	-
bo	Declared load profile / Profilo di carico dichiarato		-	-	-
bp	Daily electricity consumption / Consumo quotidiano di energia elettrica	kWh	-	-	-
bq	Water heating energy efficiency / Efficienza energetica di riscaldamento dell'acqua	ηwh	-	-	-
br	Daily fuel consumption / Consumo annuo di combustibile	kWh	-	-	-

ca	SERIES / Serie	-	-	-	-
cb	Model / Modello	-	WiSAN-PMP 1S 2.1	WiSAN-PMP 1S 3.1	WiSAN-PMP 1S 4.1
cc	Size / Grandezza	-	2,1	3,1	4,1
cd	Medium-temperature application / Applicazione a media temperatura	°C	55	55	55
ce	Low-temperature application / Applicazione a bassa temperatura	°C	35	35	35
cf	Medium-temperature class / Classe a media temperatura	-	A+++	A+++	A+++
cg	Low-temperature class / Classe a bassa temperatura	-	A+++	A+++	A+++
ch	Ptn	kW	5	6	8
ci	Qhe_ambiente	kWh	1939	2455	3051
cj	ηs	%	206	156	160
ck	LwA_in	dB(A)	-	-	-
cl	LwA_out	dB(A)	46	46	47

			LOW TEMPERATURE		
ID	Description	Symbol	4.1T	5,1	5.1T
aa	Model(s): / Modelli:	-	WiSAN-PMP 1S 4.1T	WiSAN-PMP 1S 5.1	WiSAN-PMP 1S 5.1T
ab	Air-to-water heat pump: / Pompa di calore aria/acqua:	-	YES	YES	YES
ac	Water-to-water heat pump: / Pompa di calore acqua/acqua:	-	NO	NO	NO
ad	Brine-to-water heat pump: / Pompa di calore salamoia/acqua:	-	NO	NO	NO
ae	Low-temperature heat pump: / Pompa di calore a bassa temperatura:	-	YES	YES	YES
af	Equipped with a supplementary heater: / Con riscaldatore supplementare:	-	NO	NO	NO
ag	Heat pump combination heater: / Apparecchio misto a pompa di calore:	-	NO	NO	NO
ah	Rated heat output (*) / Potenza termica nominale (*)	Prated	8	10	10
ai	Seasonal space heating energy efficiency / Efficienza energetica stagionale del riscaldamento d'ambiente	ηs	211	210	210
aj	Tj = - 7 °C	Pdh	6,99	8,67	8,67
ak	Tj = + 2 °C	Pdh	4,51	5,50	5,50
al	Tj = + 7 °C	Pdh	3,88	3,93	3,93
am	Tj = + 12 °C	Pdh	4,52	4,53	4,53
an	Tj = bivalent temperature / Temperatura bivalente	Pdh	6,99	8,67	8,67
ao	Tj = operation limit temperature / Temperatura limite di esercizio	Pdh	7,90	9,75	9,75
ap	For air-to-water heat pumps: Tj = – 15 °C (if TOL < – 20 °C) / Per le pompa di calore aria/ acqua: T j = – 15 °C (se TOL < – 20 °C)	Pdh	-	-	-
aq	Bivalent temperature / Temperatura bivalente	Tbiv	-7	-7	-7
ar	Cycling interval capacity for heating / Ciclicità degli intervalli di capacità per il riscaldamento	Pcych	-	-	-
as	Degradation co-efficient (**) / Coefficiente di degradazione (**)	Cdh	0,97	0,97	0,97
at	Tj = - 7 °C	COPd	3,30	3,19	3,19
au	Tj = + 2 °C	COPd	5,30	5,19	5,19
av	Tj = + 7 °C	COPd	6,87	7,17	7,17
aw	Tj = + 12 °C	COPd	9,03	9,12	9,12
ax	Tj = bivalent temperature / Temperatura bivalente	COPd	3,30	3,19	3,19
ay	Tj = operation limit temperature / Temperatura limite di esercizio	COPd	2,85	2,65	2,65
az	For air-to-water heat pumps: Tj = – 15 °C (if TOL < – 20 °C) / Per le pompa di calore aria/ acqua: T j = – 15 °C (se TOL < – 20 °C)	COPd	-	-	-
ba	For air-to-water heat pumps: Operation limit temperature / Per le pompe di calore aria/ acqua: temperatura limite di esercizio	TOL	-10	-10	-10
bb	Cycling interval efficiency / Efficienza della ciclicità degli intervalli	COP cych	-	-	-
bc	Heating water operating limit temperature / Temperatura limite di esercizio di riscaldamento dell'acqua	WTOL	80	80	80
bd	Off mode / Modo spento	POFF	0,015	0,015	0,015
be	Thermostat-off mode / Modo termostato spento	PTO	0,015	0,015	0,015
bf	Standby mode / Modo stand-by	PSB	0,015	0,015	0,015
bg	Crankcase heater mode / Modo riscaldamento del carter	PCK	0,015	0,015	0,015
bh	Rated heat output (*) / Potenza termica nominale (*)	Psup	0,1	0,3	0,3
bi	Type of energy input / Tipo di alimentazione energetica		-	-	-
bj	Capacity control / Controllo della capacità		Variable / Variabile	Variable / Variabile	Variable / Variabile
bl	Emissions of nitrogen oxides/Emissioni diossidi di azoto	NOx	0	0	0
bm	For air-to-water heat pumps: Rated air flow rate, outdoors / Per le pompe di calore aria/ acqua: portata d'aria, all'esterno		4680	4680	4680
bn	For water-/brine-to-water heat pumps: Rated brine or water flow rate, outdoor heat exchanger / Per le pompe di calore acqua/acqua e salamoia/acqua: flusso di salamoia o acqua nominale, scambiatore di calore all'esterno		-	-	-
bo	Declared load profile / Profilo di carico dichiarato		-	-	-
bp	Daily electricity consumption / Consumo quotidiano di energia elettrica	kWh	-	-	-
bq	Water heating energy efficiency / Efficienza energetica di riscaldamento dell'acqua	ηwh	-	-	-
br	Daily fuel consumption / Consumo annuo di combustibile	kWh	-	-	-

ca	SERIES / Serie	-	-	-	-
cb	Model / Modello	-	WiSAN-PMP 1S 4.1T	WiSAN-PMP 1S 5.1	WiSAN-PMP 1S 5.1T
cc	Size / Grandezza	-	4.1T	5,1	5.1T
cd	Medium-temperature application / Applicazione a media temperatura	°C	55	55	55
ce	Low-temperature application / Applicazione a bassa temperatura	°C	35	35	35
cf	Medium-temperature class / Classe a media temperatura	-	A+++	A+++	A+++
cg	Low-temperature class / Classe a bassa temperatura	-	A+++	A+++	A+++
ch	Ptn	kW	8	10	10
ci	Qhe_ambiente	kWh	3051	3802	3802
cj	ηs	%	160	158	158
ck	LwA_in	dB(A)	-	-	-
cl	LwA_out	dB(A)	47	47	47

			LOW TEMPERATURE		
ID	Description	Symbol	6,1	6.1 T	7,1
aa	Model(s): / Modelli:	-	WiSAN-PMP 1S 6.1	WiSAN-PMP 1S 6.1T	WiSAN-PMP 1S 7.1
ab	Air-to-water heat pump: / Pompa di calore aria/acqua:	-	YES	YES	YES
ac	Water-to-water heat pump: / Pompa di calore acqua/acqua:	-	NO	NO	NO
ad	Brine-to-water heat pump: / Pompa di calore salamoia/acqua:	-	NO	NO	NO
ae	Low-temperature heat pump: / Pompa di calore a bassa temperatura:	-	YES	YES	YES
af	Equipped with a supplementary heater: / Con riscaldatore supplementare:	-	NO	NO	NO
ag	Heat pump combination heater: / Apparecchio misto a pompa di calore:	-	NO	NO	NO
ah	Rated heat output (*) / Potenza termica nominale (*)	Prated	12	12	14
ai	Seasonal space heating energy efficiency / Efficienza energetica stagionale del riscaldamento d'ambiente	ηs	195	195	188
aj	Tj = - 7 °C	Pdh	10,70	10,70	12,47
ak	Tj = + 2 °C	Pdh	6,51	6,51	7,60
al	Tj = + 7 °C	Pdh	5,46	5,46	5,49
am	Tj = + 12 °C	Pdh	6,30	6,30	6,30
an	Tj = bivalent temperature / Temperatura bivalente	Pdh	10,70	10,70	12,47
ao	Tj = operation limit temperature / Temperatura limite di esercizio	Pdh	11,72	11,72	12,63
ap	For air-to-water heat pumps: Tj = – 15 °C (if TOL < – 20 °C) / Per le pompa di calore aria/ acqua: T j = – 15 °C (se TOL < – 20 °C)	Pdh	-	-	-
aq	Bivalent temperature / Temperatura bivalente	Tbiv	-7	-7	-7
ar	Cycling interval capacity for heating / Ciclicità degli intervalli di capacità per il riscaldamento	Pcych	-	-	-
as	Degradation co-efficient (**) / Coefficiente di degradazione (**)	Cdh	0,97	0,97	0,97
at	Tj = - 7 °C	COPd	2,89	2,89	2,63
au	Tj = + 2 °C	COPd	4,75	4,75	4,54
av	Tj = + 7 °C	COPd	7,04	7,04	7,18
aw	Tj = + 12 °C	COPd	8,64	8,64	8,70
ax	Tj = bivalent temperature / Temperatura bivalente	COPd	2,89	2,89	2,63
ay	Tj = operation limit temperature / Temperatura limite di esercizio	COPd	2,59	2,59	2,53
az	For air-to-water heat pumps: Tj = – 15 °C (if TOL < – 20 °C) / Per le pompa di calore aria/ acqua: T j = – 15 °C (se TOL < – 20 °C)	COPd	-	-	-
ba	For air-to-water heat pumps: Operation limit temperature / Per le pompe di calore aria/ acqua: temperatura limite di esercizio	TOL	-10	-10	-10
bb	Cycling interval efficiency / Efficienza della ciclicità degli intervalli	COP cych	-	-	-
bc	Heating water operating limit temperature / Temperatura limite di esercizio di riscaldamento dell'acqua	WTOL	80	80	80
bd	Off mode / Modo spento	POFF	0,015	0,015	0,015
be	Thermostat-off mode / Modo termostato spento	PTO	0,015	0,015	0,015
bf	Standby mode / Modo stand-by	PSB	0,015	0,015	0,015
bg	Crankcase heater mode / Modo riscaldamento del carter	PCK	0,015	0,015	0,015
bh	Rated heat output (*) / Potenza termica nominale (*)	Psup	0,3	0,3	1,4
bi	Type of energy input / Tipo di alimentazione energetica		-	-	-
bj	Capacity control / Controllo della capacità		Variable / Variabile	Variable / Variabile	Variable / Variabile
bl	Emissions of nitrogen oxides/Emissioni diossidi di azoto	NOx	0	0	0
bm	For air-to-water heat pumps: Rated air flow rate, outdoors / Per le pompe di calore aria/ acqua: portata d'aria, all'esterno		4780	4780	4780
bn	For water-/brine-to-water heat pumps: Rated brine or water flow rate, outdoor heat exchanger / Per le pompe di calore acqua/acqua e salamoia/acqua: flusso di salamoia o acqua nominale, scambiatore di calore all'esterno		-	-	-
bo	Declared load profile / Profilo di carico dichiarato		-	-	-
bp	Daily electricity consumption / Consumo quotidiano di energia elettrica	kWh	-	-	-
bq	Water heating energy efficiency / Efficienza energetica di riscaldamento dell'acqua	ηwh	-	-	-
br	Daily fuel consumption / Consumo annuo di combustibile	kWh	-	-	-

ca	SERIES / Serie	-	-	-	-
cb	Model / Modello	-	WiSAN-PMP 1S 6.1	WiSAN-PMP 1S 6.1T	WiSAN-PMP 1S 7.1
cc	Size / Grandezza	-	6,1	6.1T	7,1
cd	Medium-temperature application / Applicazione a media temperatura	°C	55	55	55
ce	Low-temperature application / Applicazione a bassa temperatura	°C	35	35	35
cf	Medium-temperature class / Classe a media temperatura	-	A+++	A+++	A+++
cg	Low-temperature class / Classe a bassa temperatura	-	A+++	A+++	A+++
ch	Ptn	kW	12	12	14
ci	Qhe_ambiente	kWh	5064	5064	6118
cj	ηs	%	155	155	152
ck	LwA_in	dB(A)	-	-	-
cl	LwA_out	dB(A)	48	48	48

			LOW TEMPERATURE		
ID	Description	Symbol	7.1T	8,1	8.1T
aa	Model(s): / Modelli:	-	WiSAN-PMP 1S 7.1T	WiSAN-PMP 1S 8.1	WiSAN-PMP 1S 8.1T
ab	Air-to-water heat pump: / Pompa di calore aria/acqua:	-	YES	YES	YES
ac	Water-to-water heat pump: / Pompa di calore acqua/acqua:	-	NO	NO	NO
ad	Brine-to-water heat pump: / Pompa di calore salamoia/acqua:	-	NO	NO	NO
ae	Low-temperature heat pump: / Pompa di calore a bassa temperatura:	-	YES	YES	YES
af	Equipped with a supplementary heater: / Con riscaldatore supplementare:	-	NO	NO	NO
ag	Heat pump combination heater: / Apparecchio misto a pompa di calore:	-	NO	NO	NO
ah	Rated heat output (*) / Potenza termica nominale (*)	Prated	14	16	16
ai	Seasonal space heating energy efficiency / Efficienza energetica stagionale del riscaldamento d'ambiente	ηs	188	186	186
aj	Tj = - 7 °C	Pdh	12,47	14,07	14,07
ak	Tj = + 2 °C	Pdh	7,60	8,54	8,54
al	Tj = + 7 °C	Pdh	5,49	5,50	5,50
am	Tj = + 12 °C	Pdh	6,30	6,27	6,27
an	Tj = bivalent temperature / Temperatura bivalente	Pdh	12,47	14,07	14,07
ao	Tj = operation limit temperature / Temperatura limite di esercizio	Pdh	12,63	13,42	13,42
ap	For air-to-water heat pumps: Tj = – 15 °C (if TOL < – 20 °C) / Per le pompa di calore aria/ acqua: T j = – 15 °C (se TOL < – 20 °C)	Pdh	-	-	-
aq	Bivalent temperature / Temperatura bivalente	Tbiv	-7	-7	-7
ar	Cycling interval capacity for heating / Ciclicità degli intervalli di capacità per il riscaldamento	Pcych	-	-	-
as	Degradation co-efficient (**) / Coefficiente di degradazione (**)	Cdh	0,97	0,97	0,97
at	Tj = - 7 °C	COPd	2,63	2,45	2,45
au	Tj = + 2 °C	COPd	4,54	4,54	4,54
av	Tj = + 7 °C	COPd	7,18	7,27	7,27
aw	Tj = + 12 °C	COPd	8,70	8,83	8,83
ax	Tj = bivalent temperature / Temperatura bivalente	COPd	2,63	2,45	2,45
ay	Tj = operation limit temperature / Temperatura limite di esercizio	COPd	2,53	2,43	2,43
az	For air-to-water heat pumps: Tj = – 15 °C (if TOL < – 20 °C) / Per le pompa di calore aria/ acqua: T j = – 15 °C (se TOL < – 20 °C)	COPd	-	-	-
ba	For air-to-water heat pumps: Operation limit temperature / Per le pompe di calore aria/ acqua: temperatura limite di esercizio	TOL	-10	-10	-10
bb	Cycling interval efficiency / Efficienza della ciclicità degli intervalli	COP cych	-	-	-
bc	Heating water operating limit temperature / Temperatura limite di esercizio di riscaldamento dell'acqua	WTOL	80	80	80
bd	Off mode / Modo spento	POFF	0,015	0,015	0,015
be	Thermostat-off mode / Modo termostato spento	PTO	0,015	0,015	0,015
bf	Standby mode / Modo stand-by	PSB	0,015	0,015	0,015
bg	Crankcase heater mode / Modo riscaldamento del carter	PCK	0,015	0,015	0,015
bh	Rated heat output (*) / Potenza termica nominale (*)	Psup	1,4	2,6	2,6
bi	Type of energy input / Tipo di alimentazione energetica		-	-	-
bj	Capacity control / Controllo della capacità		Variable / Variabile	Variable / Variabile	Variable / Variabile
bl	Emissions of nitrogen oxides/Emissioni diossidi di azoto	NOx	0	0	0
bm	For air-to-water heat pumps: Rated air flow rate, outdoors / Per le pompe di calore aria/ acqua: portata d'aria, all'esterno		4780	4780	4780
bn	For water-/brine-to-water heat pumps: Rated brine or water flow rate, outdoor heat exchanger / Per le pompe di calore acqua/acqua e salamoia/acqua: flusso di salamoia o acqua nominale, scambiatore di calore all'esterno		-	-	-
bo	Declared load profile / Profilo di carico dichiarato		-	-	-
bp	Daily electricity consumption / Consumo quotidiano di energia elettrica	kWh	-	-	-
bq	Water heating energy efficiency / Efficienza energetica di riscaldamento dell'acqua	ηwh	-	-	-
br	Daily fuel consumption / Consumo annuo di combustibile	kWh	-	-	-

ca	SERIES / Serie	-	-	-	-
cb	Model / Modello	-	WiSAN-PMP 1S 7.1T	WiSAN-PMP 1S 8.1	WiSAN-PMP 1S 8.1T
cc	Size / Grandezza	-	7.1T	8,1	8.1 T
cd	Medium-temperature application / Applicazione a media temperatura	°C	55	55	55
ce	Low-temperature application / Applicazione a bassa temperatura	°C	35	35	35
cf	Medium-temperature class / Classe a media temperatura	-	A+++	A+++	A+++
cg	Low-temperature class / Classe a bassa temperatura	-	A+++	A+++	A+++
ch	Ptn	kW	14	15	15
ci	Qhe_ambiente	kWh	6118	6966	6966
cj	ηs	%	152	152	152
ck	LwA_in	dB(A)	-	-	-
cl	LwA_out	dB(A)	48	48	48

Notes

DECLARATION OF CONFORMITY EU

DICHIARAZIONE DI CONFORMITÀ UE
KONFORMITÄTSERKLÄRUNG EU
DECLARATION DE CONFORMITE EU
DECLARACIÓN DE CONFORMIDAD EU

WE DECLARE UNDER OUR SOLE RESPONSIBILITY THAT THE MACHINE
DICHIARIAMO SOTTO LA NOSTRA SOLA RESPONSABILITÀ CHE LA MACCHINA
WIR ERKLÄREN EIGENVERANTWORTLICH, DASS DIE MASCHINE
NOUS DÉCLARONS SOUS NOTRE SEULE RESPONSABILITÉ QUE LA MACHINE
EL FABRICANTE DECLARA BAJO SU EXCLUSIVA RESPONSABILIDAD QUE LA MÁQUINA

CATEGORY	WATER CHILLERS - Heat pump
CATEGORIA	REFRIGERATORI D'ACQUA - Pompa di calore
KATEGORIE	KALTWASSERSÄTZE - Wärmepumpe
CATEGORIE	RÉFRIGÉRATEURS D'EAU - Pompe à chaleur
CATEGORIA	ENFRIADORAS DE AGUA - Bomba de calor

TYPE / TIPO / TYP / TYPE / TIPO

WISAN-PMP 1S 2.1	WISAN-PMP 1S 3.1	WISAN-PMP 1S 4.1	WISAN-PMP 1S 4.1T
WISAN-PMP 1S 5.1	WISAN-PMP 1S 5.1T	WISAN-PMP 1S 6.1	WISAN-PMP 1S 6.1T
WISAN-PMP 1S 7.1	WISAN-PMP 1S 7.1T	WISAN-PMP 1S 8.1	WISAN-PMP 1S 8.1T

PED CATEGORY/CATEGORIA PED/PED KATEGORIE/ CATÉGORIE PED/CATEGORIA PED: II

- **COMPLIES WITH THE FOLLOWING EEC DIRECTIVES, INCLUDING THE MOST RECENT AMENDMENTS, AND THE RELEVANT NATIONAL HARMONISATION LEGISLATION CURRENTLY IN FORCE:**
- RISULTA IN CONFORMITÀ CON QUANTO PREVISTO DALLE SEGUENTI DIRETTIVE CEE, COMPRESE LE ULTIME MODIFICHE, E CON LA RELATIVA LEGISLAZIONE NAZIONALE DI RECEPIMENTO:
- DEN IN DEN FOLGENDEN EWG-RICHTLINIEN VORGESEHENEN VORSCHRIFTEN, EINSCHLIEßLICH DER LETZTEN ÄNDERUNGEN, SOWIE DEN ANGEWANDTEN LANDESGESETZEN ENTSPRICHT:
- EST CONFORME AUX DIRECTIVES CEE SUIVANTES, Y COMPRIS LES DERNIÈRES MODIFICATIONS, ET À LA LÉGISLATION NATIONALE D'ACCUEIL CORRESPONDANTE:
- ES CONFORME A LAS SIGUIENTES DIRECTIVAS CEE, INCLUIDAS LAS ÚLTIMAS MODIFICACIONES, Y A LA RELATIVA LEGISLACIÓN NACIONAL DE RECEPCIÓN:

☒ **2014/35/EC** **low voltage directive/** direttiva bassa tensione/Bestimmungen der Niederspannungsrichtlinie/ directive basse tension / directiva de baja tensión

☒ **2014/30/UE** **electromagnetic compatibility** / compatibilità elettromagnetica
Elektromagnetische Verträglichkeit / compatibilité électromagnétique / compatibilidad electromagnética

☒ **2014/53/EU** **Radio Equipment Directive** / Direttiva sulle apparecchiature radio / Richtlinie über Funkanlagen / Directive sur les équipements radio / Directiva sobre equipos radioeléctricos

☒ **2014/68/UE** **according to module H – Reference to Notified Body N° CE-1370-PED-H-CLI 001-2X-ITA Bureau Veritas Italia**
in accordo al modulo H – Riferimento all'Organismo Notificato N° CE 1370, Bureau Veritas Italia
gemä β Vordruck H – Bezug auf benachrichtigte Behörde N° CE 1370, Bureau Veritas Italia
conformément au module H – Par référence à l'Organisme Notifié N° CE 1370, Bureau Veritas Italia
según el Módulo H – Con referencia al Organismo Notificado N° CE 1370, Bureau Veritas Italia

☒ **2009/125/CE** **Ecodesign /**Progettazione ecocompatibile / Ecodesign / Éco-conception / Ecodiseño

☒ **2011/65/UE** **2015/863/UE** **RoHS**

☒ **REG.813/2013 REG.811/2013**

-Unit manufactured and tested according to the followings Standards:	EN 60335-40 :2003+A11 :2004+A12 :2005+A1 :2006+A12 :2012+AC :2013+A2 :2009+
-Unità costruita e collaudata in conformità alle seguenti Normative:	AC :2006+AC :2010 EN 62233 :2008+AC :2008 EN 62311 :2008 EN 62311 :2020
-Unité construite et testée en conformité avec les Réglementations suivantes	EN 60335-1 :2012+AC :2014+A11 :2014+A13 :2017+A15 :2021
-Unidad construida y probada de acuerdo con las siguientes Normativas	EN IEC 55014-1 :2021 EN IEC 55014-2 :2021 ETSI EN 301 489-1 V2.2.3 :2019
-Gebautes und geprüftes Gerät nach folgenden Normen	ETSI EN 310 489-17 V3.2.4 :2020 EN IEC 61000-3-2 :2019/A1 :2021
	EN IEC 61000-3-3 :2013/A2 :2021 ETSI EN 300 328 V2.2.2 :2019
	EN IEC 63000 :2018 EN 378-2 :2017 EN 14825:2022
	EN 14511-1:2022 EN 14511-2:2022 EN 14511-3:2022 EN 14511-4:2022

-Responsible to constitute the technical file is the company n°.00708410253 and registered at the Chamber of Commerce of Belluno Italy
-Responsabile a costituire il fascicolo tecnico è la società n°.00708410253 registrata presso la Camera di Commercio di Belluno Italia
-Verantwortliche für die technischen Unterlagen zusammenstellen n°.00708410253 ist das Unternehmen bei der Handelskammer von Belluno Italien registriert
-Responsable pour compiler le dossier technique est la société n°00708410253 enregistrée à la Chambre de Commerce de Belluno en Italie
-Encargado de elaborar el expediente técnico es la empresa nº00708410253 registrada en la Cámara de Comercio de Belluno Italia

FELTRE, 27/06/2025

NAME / NOME / VORNAME / PRÉNOM / NOMBRE: STEFANO
SURNAME / COGNOME / ZUNAME / NOM / APELLIDOS: BELLO
COMPANY POSITION / POSIZIONE / BETRIEBSPOSITION / FONCTION / CARGO: LEGALE RAPPRESENTANTE

CLIVET S.P.A. - Via Camp Lonc, 25 - Z.I. VILLAPAIERA - 32032 FELTRE (BL) – ITALIA
Cap. Soc. Eur 20.000.000 i.v. – C.F. e reg.Impr. BL n°.00708410253 – R.E.A. n°.66577 –P.I./ VAT :IT 0
Tel. +39 0439 3131 - Fax +39 0439 313300 – Sito Web : www.clivet.it E-mail : info@clivet.it - Registro A.E.E. IT08020000001697

FOR OVER 35 YEARS WE HAVE BEEN
OFFERING SOLUTIONS FOR SUSTAINABLE
COMFORT AND THE WELL-BEING OF
PEOPLE AND THE ENVIRONMENT

Info & Contacts: www.clivet.com

CLIVET